City of Oxford
Standard Specifications & Construction Details

Table of Contents for Standard Details

EROSION CONTROL ..... DETAIL NUMBER
Standard Temporary Silt Fence Detail 2.01
Standard Sediment Basin 2.02
Curb Inlet Sediment Filter 2.03
Yard Inlet Sediment Filter 2.04
Temporary Construction Entrance 2.05
Dumpster Pad Detail 2.07

STREETS ..... DETAIL NUMBER
Standard Street Sections 3.01
Standard Street Sections 3.02
Rural Cul-de-sac – Symmetrical (No Curb & Gutter) ..... (Sheet 1 of 2) 3.04
Urban Cul-de-sac – Symmetrical (With Curb & Gutter) ..... (Sheet 2 of 2) 3.04
Standard Shoulder Section Without Sidewalk 3.05
Standard Trench & Pavement Repair Sections 3.06
Standard Street Cross Section Showing Utility Locations 3.07
Public Street Geometric Standards 3.09

CURB & GUTTER, DRIVEWAYS & SIDEWALKS ..... DETAIL NUMBER
Standard Concrete Curb & Gutter 4.01
Standard Method of Removing Existing Curb 4.02
Standard Method of Ending Curb & Gutter 4.03
Standard Curb Drain 4.04
Standard Driveway Apron 4.05
Standard Concrete Sidewalk 4.06
Standard Wheelchair Ramp – Single Type 4.07
Standard Wheelchair Ramp – Double Type 4.08

STORM DRAINAGE ..... DETAIL NUMBER
Standard Yard Inlet With Concrete Slab 5.01
Standard Yard Inlet With Grate & Frame 5.02
Standard Open-Throated Catch Basin ..... (2 Sheets) 5.03
Standard Reinforced Concrete Headwall With Wing Walls ..... (2 Sheets) 5.04
Standard Concrete Block Headwall With Wing Walls ..... (2 Sheets) 5.05
Standard Brick Headwall With Wing Walls ..... (2 Sheets) 5.06
Dimensions for Headwall With Wing Walls ..... (2 Sheets) 5.07

WATER DISTRIBUTION/PIPE BEDDING & BACKFILL ..... DETAIL NUMBER
Pipe Bedding & Backfilling / Class "D" & "C" 6.01
Pipe Bedding & Backfilling / Class "B" & "A" 6.02
Standard ¾" & 1" Backflow / Meter Assembly ..... (Sheet 1 of 2) 6.03
Standard ¾" & 1" Meter Box Installation ..... (Sheet 2 of 2) 6.03
1 ½" & 2" Meter Installation & Vault 6.04
Standard 3" & 4" Meter Installation & Vault 6.05
Standard 2" Blow-Off Assembly 6.06
Standard Hydrant Installation 6.07
Standard Hydrant Location 6.08
Yard Hydrant (non-freeze) 6.09
Standard Valve Box Installation 6.10
Standard Capping Detail 6.11
Standard Thrust Collar Installation 6.12
Standard Air Release Manhole for Water Mains 6.13
Standard Reaction Blocking 6.14
Standard Multiple Branch Services 6.15
Irrigation Tap on Existing Service 6.16

SANITARY SEWER ..... DETAIL NUMBER
Standard Sanitary Sewer Tap & Service 7.01
Sanitary Sewer Service Connections 7.02
4' Diameter Precast Manhole 7.03
5' Diameter Precast Manhole 7.04
Standard Manhole Ring & Cover for Manholes in Paved Areas ..... (3 Sheets) 7.05
Standard Manhole Ring & Cover Encasement 7.06
Standard Drop Manhole 7.07
Standard Drop Manhole for Sewer Service 7.08
Standard Air Release Manhole for Sanitary Sewer Force Mains 7.09
4" Sanitary Sewer Tap & Service for Sewer Mains Over 14' Deep 7.10
High Velocity Manhole Invert 7.11
Concrete Encasement For Stream Crossing 7.12

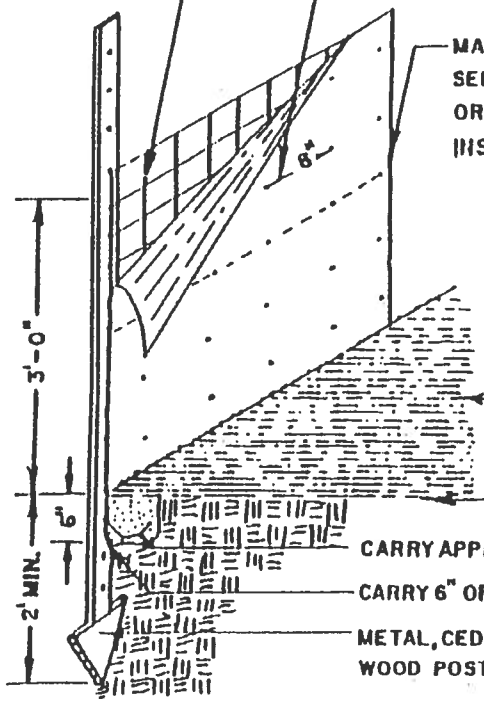

NOTES:

1) TOTAL DRAINAGE AREA FLOWING TO SILT FENCE MAY NOT EXCEED 1 ACRE.
2) SILT FENCES SHOULD NOT BE USED AT PIPE OUTLETS OR IN AREAS OF CONCENTRATED FLOW (CREEKS, DITCHLINES, SWALES ETC.)

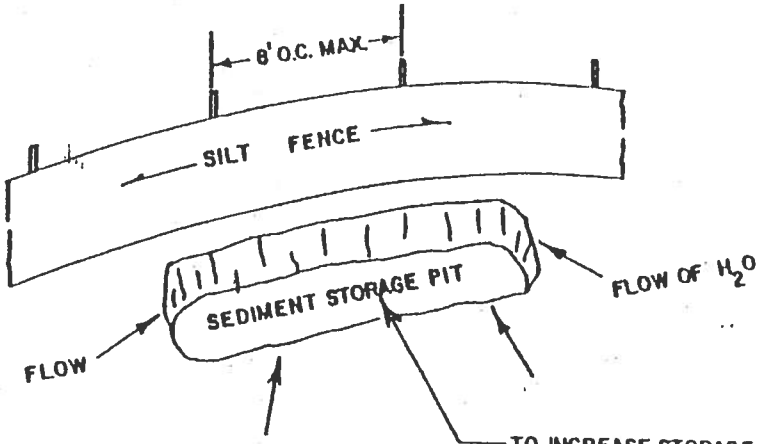

TO INCREASE STORAGE CAPACITY AND PROLONG THE LIFE OF THE SILT FENCE, IT IS GENERALLY ADVISABLE TO DIG A SEDIMENT PIT IN FRONT OF YOUR SILT FENCE WHENEVER POSSIBLE.

REVISIONS	
DATE	DESCRIPTION

City of Oxford STANDARDS	STANDARD TEMPORARY SILT FENCE DETAIL	STD. NO. 2.01

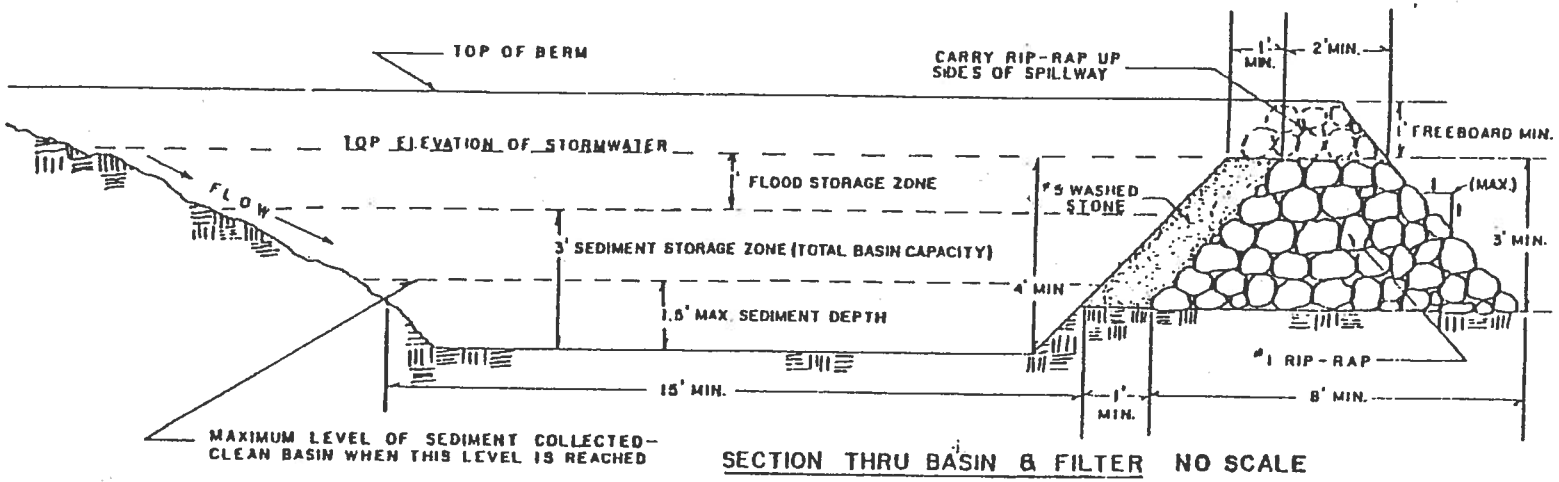

SECTION THRU BASIN & FILTER NO SCALE

GRAVEL & RIP-RAP FILTER BASIN DETAIL

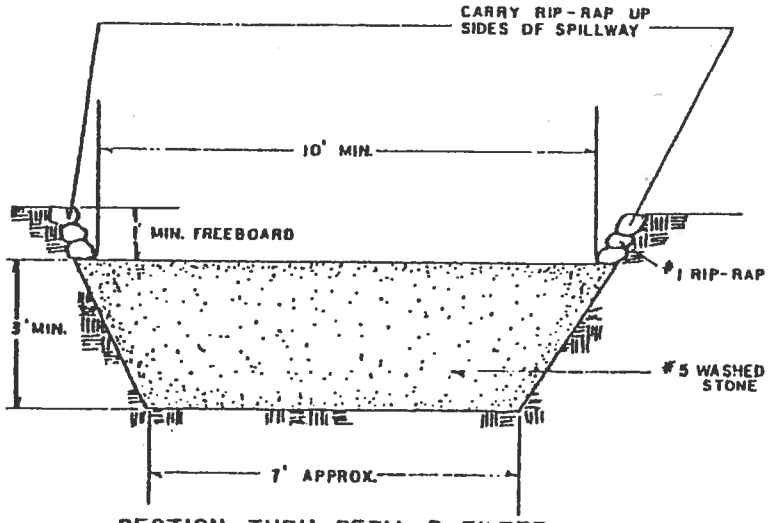

SECTION THRU BERM & FILTER
NO SCALE

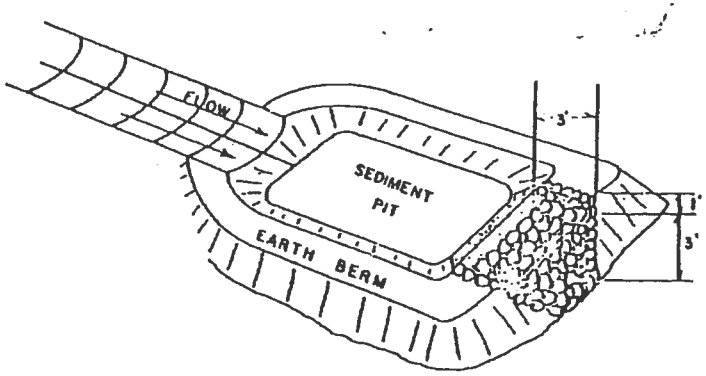

PERSPECTIVE VIEW
NO SCALE

REVISIONS	
DATE	DESCRIPTION

City of Oxford STANDARDS

STANDARD SEDIMENT BASIN

STD. NO. 2.02

BLOCK AND GRAVEL CURB INLET SEDIMENT FILTER

a. TWO CONCRETE BLOCKS SHALL BE PLACED ON THEIR SIDES ABUTTING THE CURB AT EITHER SIDE OF THE INLET OPENING. A 2"x 4" STUD SHALL BE CUT AND PLACED THROUGH THE OUTER HOLES OF THE SPACER BLOCKS TO BRACE THE FRONT BLOCKS. FRONT BLOCKS ARE PLACED ON THEIR SIDES ACROSS THE INLET AND ABUTTING THE SPACER BLOCKS.

b. HARDWARE CLOTH OR COMPARABLE WIRE MESH WITH 1/2" OPENINGS SHALL BE PLACED OVER THE OUTSIDE VERTICAL FACE (WEBBING) OF THE BLOCKS TO PREVENT FILTER STONE FROM BEING WASHED THROUGH THE HOLES IN THE BLOCK.

c. NCDOT #5 WASHED STONE SHALL BE PILED AGAINST THE WIRE TO THE TOP OF THE BLOCK.

d. CHECK DEVICE AFTER EACH RAIN. REPLACE WASHED STONE IF IT CLOGS WITH SEDIMENT.

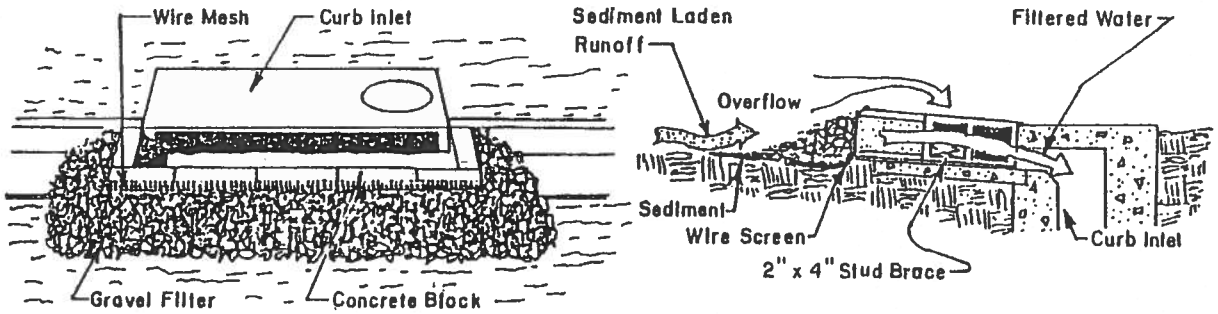

NOTES: Applicable at curb inlets where an overflow capability is necessary to prevent excessive ponding in front of the inlet.

SOURCE: Va. SWCC. MODIFIED & REDRAFTED BY WCCDS - Eng. Div. on 3-5-88. Used by permission.

REVISIONS	
DATE	DESCRIPTION

City of Oxford STANDARDS

CURB INLET SEDIMENT FILTER

STD. NO. 2.03

BLOCK AND GRAVEL DROP INLET SEDIMENT FILTER

a. PLACE CONCRETE BLOCKS LENGTHWISE ON THEIR SIDES IN A SINGLE ROW AROUND THE PERIMETER OF THE INLET, WITH THE ENDS OF ADJACENT BLOCKS ABUTTING. THE HEIGHT CAN BE VARIED, DEPENDING ON DESIGN NEEDS, BY STACKING COMBINATIONS OF 4", 8", AND 12" WIDE BLOCKS. THE MIN. HEIGHT SHALL BE 12", MAX. HEIGHT 24".

b. WIRE MESH OR HARDWARE CLOTH W/ 1/2" OPENINGS SHALL BE PLACED OVER THE OUTSIDE VERTICAL FACE (WEBBING) OF THE BLOCKS, TO PREVENT STONE FROM BEING WASHED THROUGH THE HOLES IN THE BLOCKS.

c. STONE SHALL BE PILED AGAINST THE WIRE TO THE TOP OF THE BLOCK. NCDOT # 5 WASHED STONE.

d. CHECK DEVICE AFTER EACH RAIN. REPLACE WASHED STONE IF IT CLOGS WITH SEDIMENT.

e. SCRAP 1"x4" BOARDS PLACED THROUGH THE HOLES OF CORNER BLOCKS PREVENTS COLLAPSE.

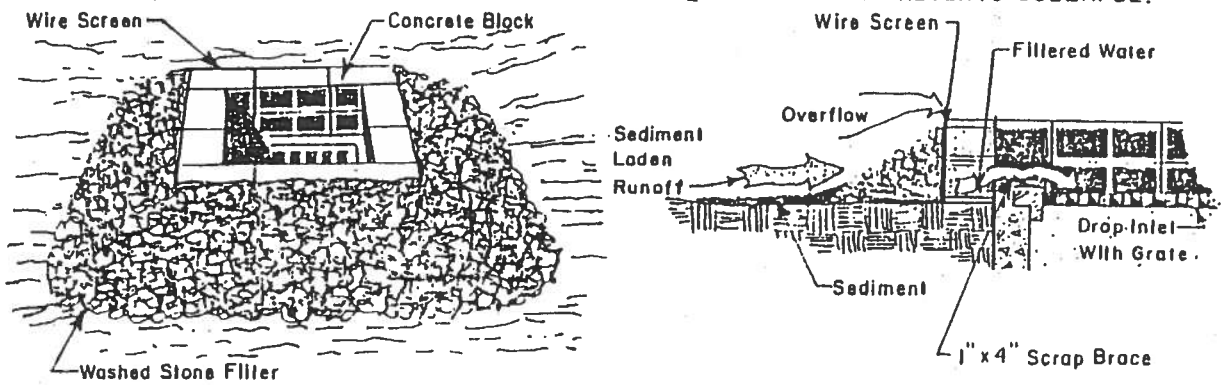

NOTES: Can handle heavy flows. Overflow capability prevents excessive ponding around the structure.

SOURCE: Va. SWCC. MODIFIED & REDRAFTED BY WCCDS-Eng. Div. on 3-4-88. Used by permission.

REVISIONS	
DATE	DESCRIPTION

City of Oxford STANDARDS

YARD INLET SEDIMENT FILTER

STD. NO. 2.04

TEMPORARY GRAVEL CONSTRUCTION ENTRANCE

a. NCDOT # 5 or # 57 WASHED STONE SHALL BE USED. PAD TO BE 50' L x 20' W x 6" D AT A MINIMUM.

b. TURNING RADIUS SUFFICIENT TO ACCOMODATE LARGE TRUCKS IS TO BE PROVIDED.

c. ENTRANCE(S) SHOULD BE LOCATED TO PROVIDE FOR MAXIMUM UTILITY BY ALL CONSTRUCTION VEHICLES.

d. MUST BE MAINTAINED IN A CONDITION WHICH WILL PREVENT TRACKING OR DIRECT FLOW OF MUD ONTO STREETS. PERIODIC TOPDRESSING WITH STONE WILL BE NECESSARY; KEEP SOME HANDY.

e. ANY MATERIAL WHICH STILL MAKES IT ONTO THE ROAD MUST BE CLEANED UP IMMEDIATELY.

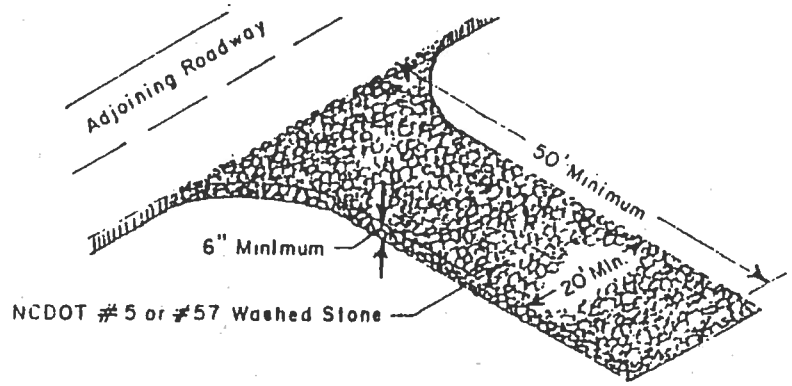

NOTES: APPLICABLE AT ALL POINTS OF INGRESS & EGRESS UNTIL SITE IS STABILIZED. FREQUENT CHECKS OF THE DEVICE AND TIMELY MAINTENANCE MUST BE PROVIDED.

SOURCE: Va. SWCC. MODIFIED & REDRAFTED ON 3-10-88 BY WCCDS Eng. Div., Used by Permission.

REVISIONS	
DATE	DESCRIPTION

City of Oxford
STANDARDS

TEMPORARY CONSTRUCTION ENTRANCE

STD. NO.
2.05

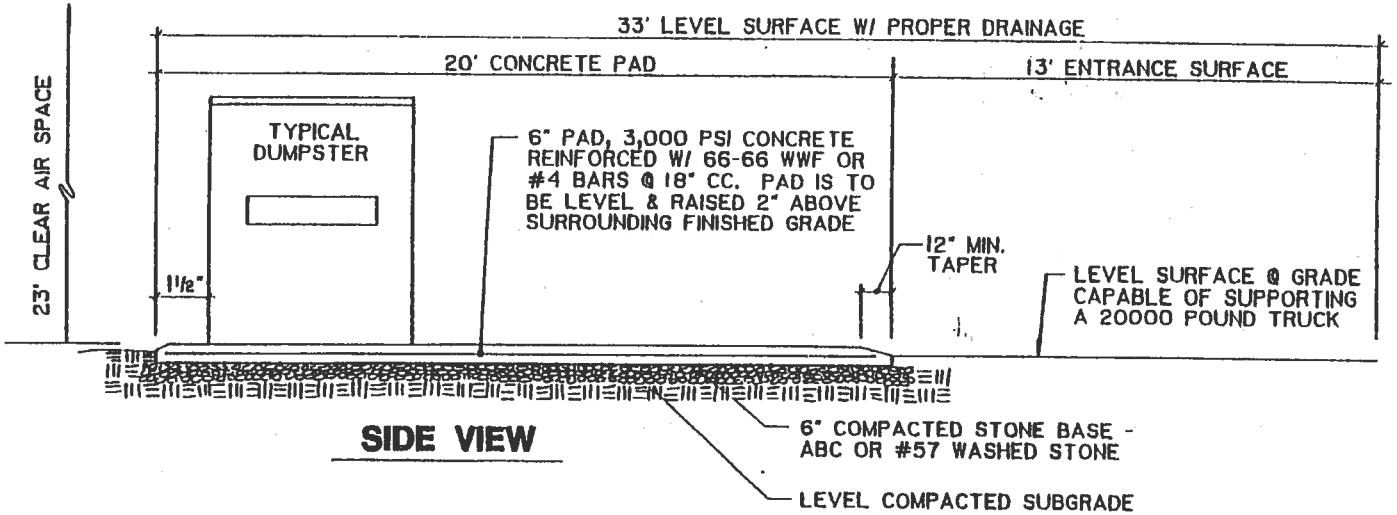

SIDE VIEW

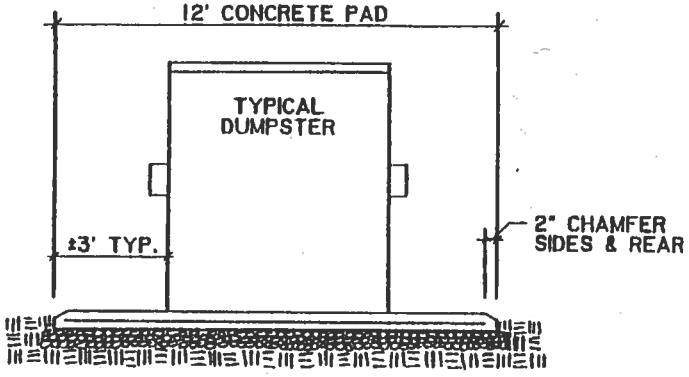

FRONT VIEW

GENERAL NOTES:

1. NO OBSTRUCTIONS SHALL BE PERMITTED WITHIN 23' ABOVE DUMPSTER PAD OR ENTRANCE.
2. FENCING MUST BE PLACED OUTSIDE OF PAD. GATES SHALL HAVE 12' CLEAR OPENING.

DUMPSTER PAD DETAIL

NO SCALE

REVISIONS	
DATE	DESCRIPTION
5/22/91	INCREASE CLEAR OPENING TO 12'

City of Oxford
STANDARDS

DUMPSTER PAD DETAIL

STD. NO.
2.07

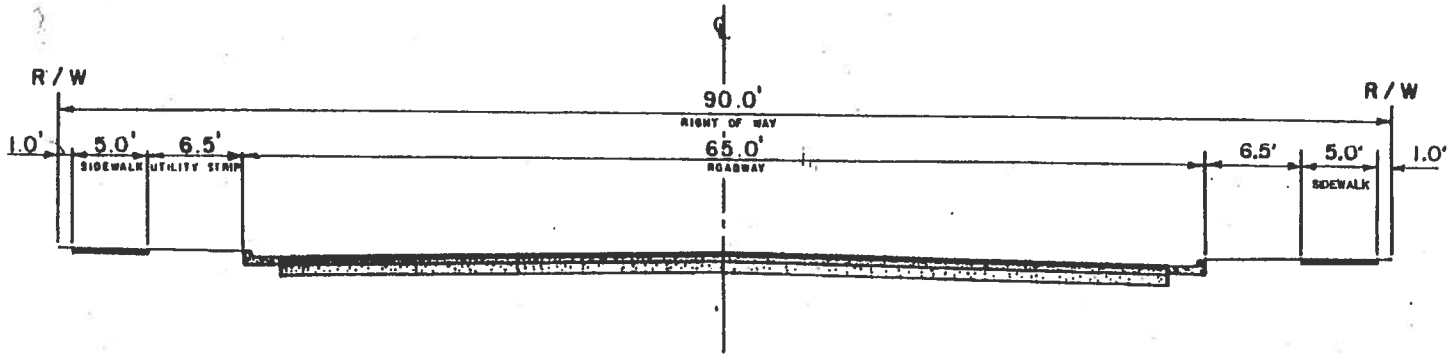

PAVEMENT DESIGN

1 1/2" I-2
2" TYPE H
8" A.B.C.

90' RIGHT OF WAY
65' ROADWAY SECTION — MAJOR THOROUGHFARE

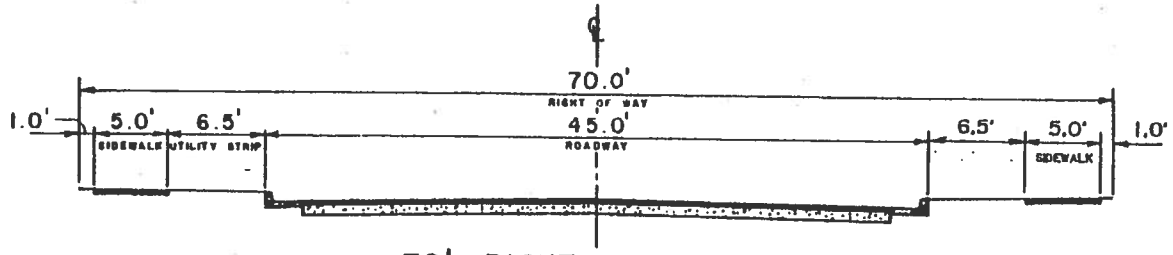

PAVEMENT DESIGN

2 1/2" I-2
8" A.B.C.

70' RIGHT OF WAY
45' ROADWAY SECTION — MINOR THOROUGHFARE

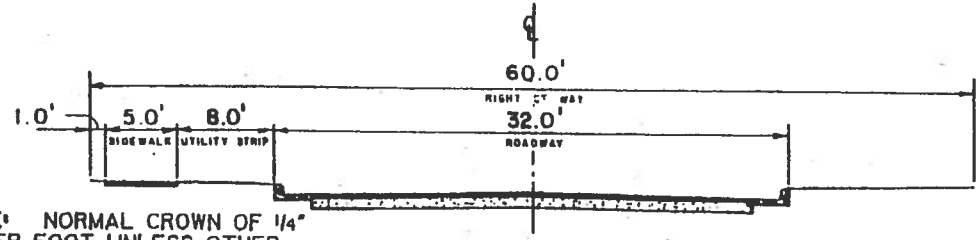

PAVEMENT DESIGN

2 1/2" I-2
8" A.B.C.

NOTE: NORMAL CROWN OF 1/4" PER FOOT UNLESS OTHERWISE DIRECTED BY TOWN ENGINEER

60' RIGHT OF WAY
32' ROADWAY SECTION — URBAN STREET

REVISIONS	
DATE	DESCRIPTION
6-93	ADD SIDEWALK

City of Oxford
STANDARDS

STANDARD STREET SECTIONS

STD. NO.
3.01

PAVEMENT DESIGN

2½" I - 2
8" A B C

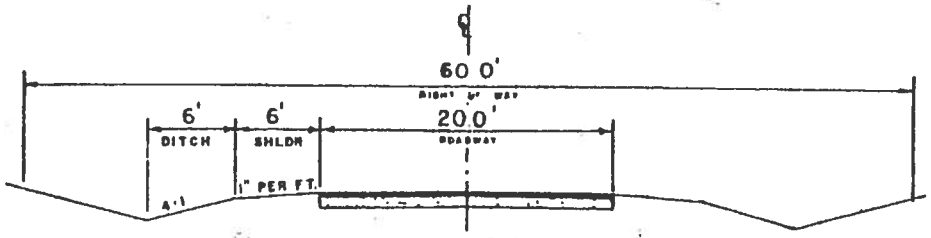

60' RIGHT OF WAY
20' ROADWAY SECTION - RURAL STREET

PAVEMENT DESIGN

2½" I - 2
6" A B C

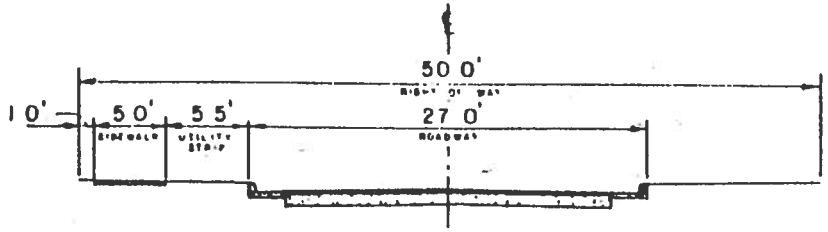

50' RIGHT OF WAY
27' ROADWAY SECTION - URBAN CUL-DE-SAC ST.

PAVEMENT DESIGN

2½" I - 2
8" A B C

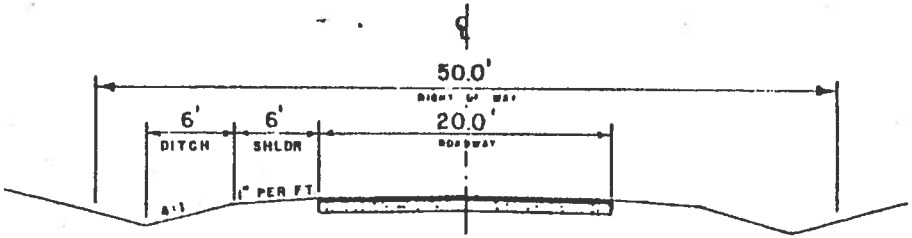

50' RIGHT OF WAY
20' ROADWAY SECTION - RURAL CUL-DE-SAC ST.

REVISIONS	
DATE	DESCRIPTION

NOTE NORMAL CROWN OF 1/4" PER FOOT UNLESS OTHERWISE DIRECTED BY TOWN ENGINEER

City of Oxford STANDARDS

STANDARD STREET SECTIONS

STD. NO. 3.02

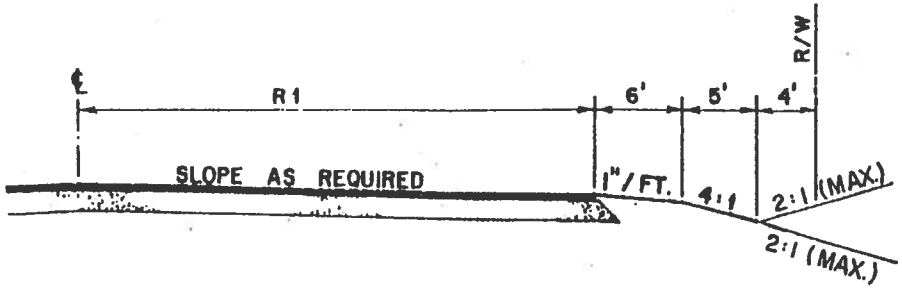

SECTION "A-A"

TYPE	R1	R2
RESIDENTIAL	35'	50'
NON-RESIDENTIAL	45'	60'

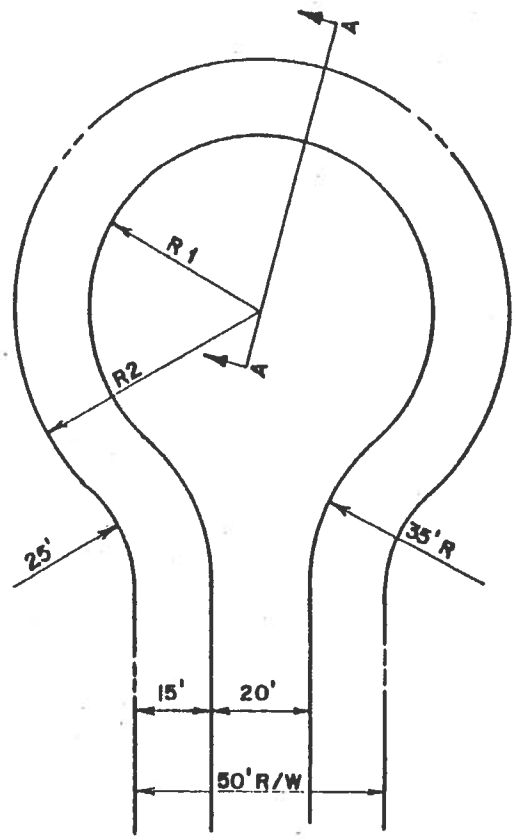

REVISIONS	
DATE	DESCRIPTION

SHEET 1 OF 2

City of Oxford STANDARDS

RURAL CUL-DE-SAC : SYMMETRICAL (NO CURB & GUTTER)

STD. Nº 3.04

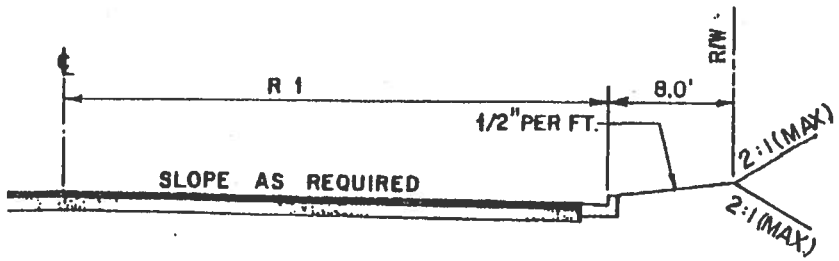

SECTION "A-A"

TYPE	R 1	R2
RESIDENTIAL	37'	45'
NON-RESIDENTIAL	47'	55'

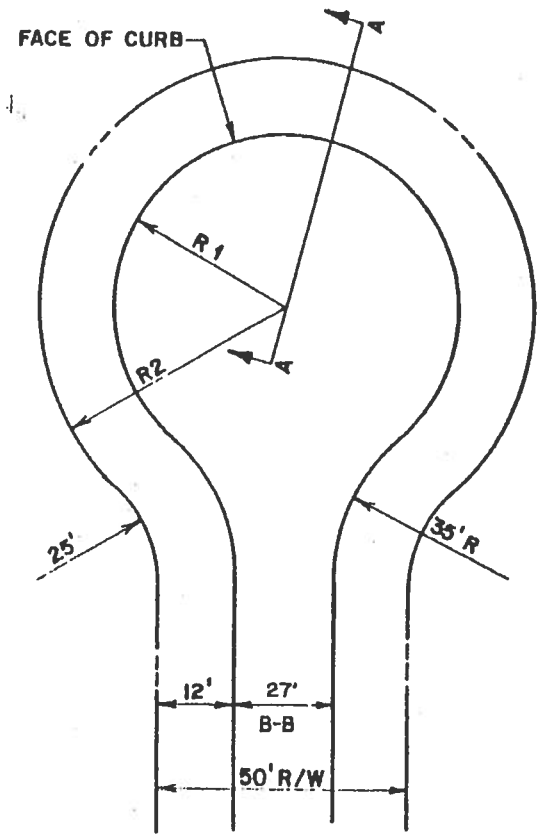

REVISIONS	
DATE	DESCRIPTION
6-93	ADD B-B DIM.

SHEET 2 OF 2

City of Oxford STANDARDS

URBAN CUL-DE-SAC : SYMMETRICAL WITH CURB & GUTTER

STD. Nº 3.04

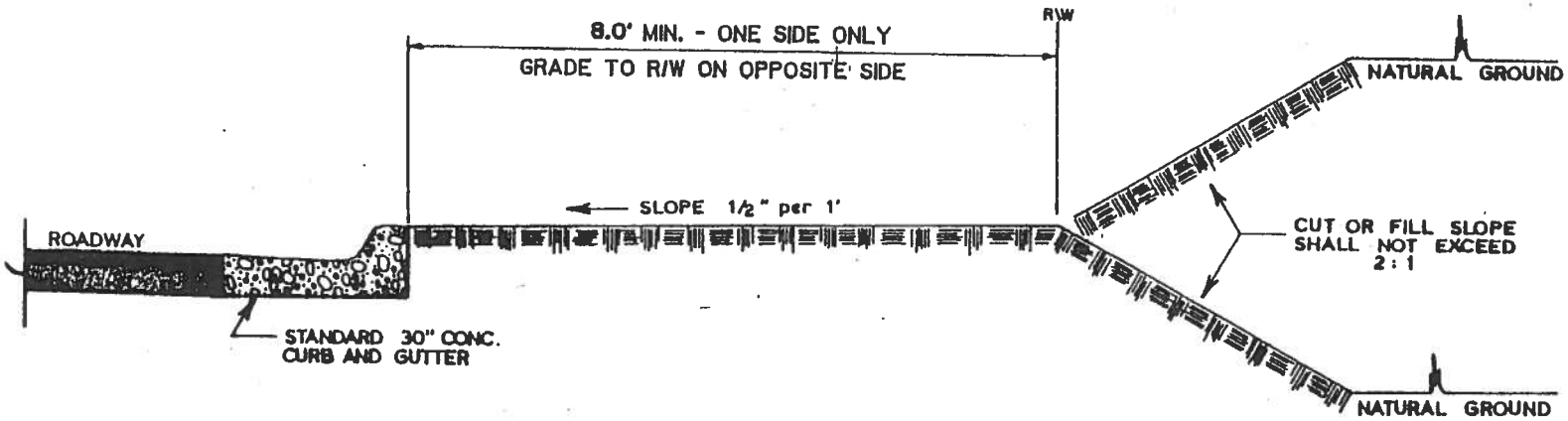

REVISIONS	
DATE	DESCRIPTION

City of Oxford
STANDARDS

STANDARD SHOULDER SECTION WITHOUT SIDEWALK

STD. NO
3.05

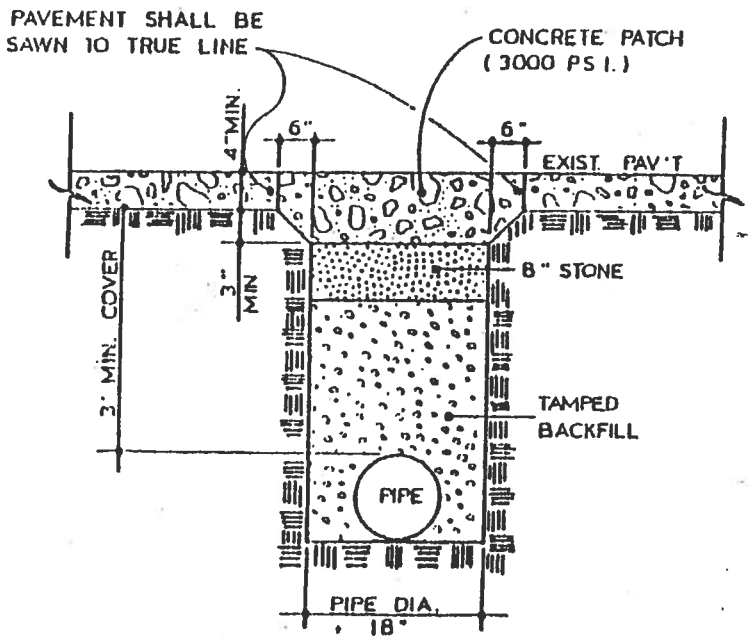

CONCRETE PAVEMENT

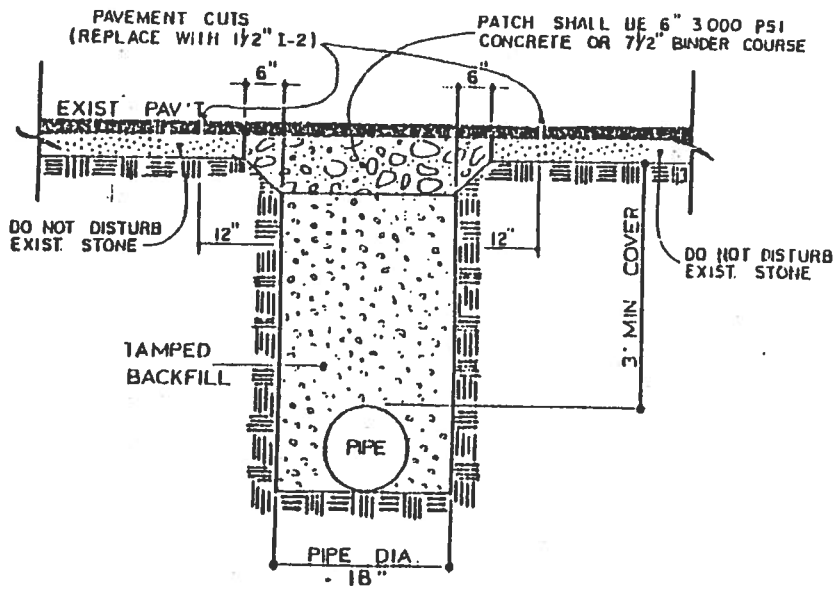

ASPHALT PAVEMENT

NOTE TO CONTRACTOR:
ALL PAVEMENT CUTS SHALL BE REPAIRED WITHIN A MAXIMUM OF SEVEN (7) DAYS FROM THE DATE THE CUT IS MADE. IF CONDITIONS DO NOT PERMIT A PERMANENT REPAIR WITHIN THE GIVEN TIME LIMIT, PERMISSION TO MAKE A TEMPORARY REPAIR MUST BE OBTAINED FROM THE TOWN ENGINEER.

REVISIONS	
DATE	DESCRIPTION

City of Oxford STANDARDS

STANDARD TRENCH & PAVEMENT REPAIR SECTIONS

STD. NO. 3.06

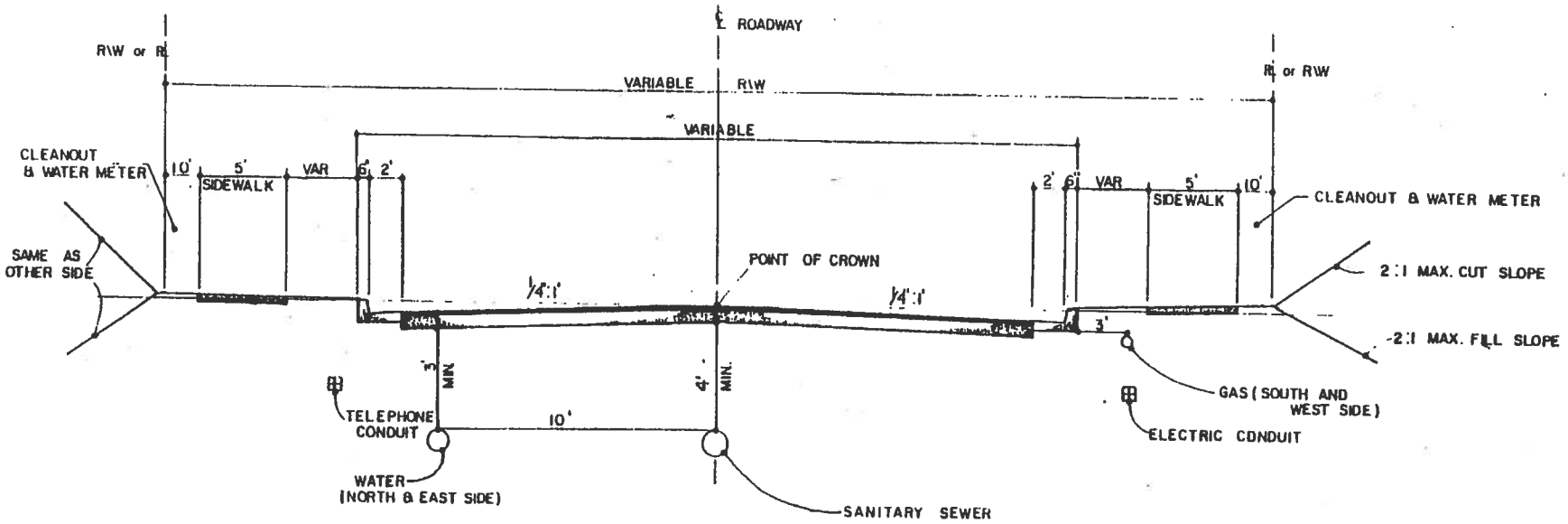

CROSS SECTION
N.T.S

REVISIONS	
DATE	DESCRIPTION

NOTE. THERE SHALL BE AN 18" VERTICAL SEPARATION BETWEEN WATER AND SEWER LINES.

City of Oxford STANDARDS

STANDARD STREET CROSS SECTION
SHOWING UTILITY LOCATIONS

STD. Nº 3.07

PUBLIC STREET GEOMETRIC STANDARDS

CLASSIFICATION	MINIMUM DESIGN SPEED (MPH)	HORIZONTAL CURVE CONTROLS MAXIMUM SUPER ELEV. (FT/FT)	HORIZONTAL CURVE CONTROLS MINIMUM RADIUS (FT)	VERTICAL CURVE CONTROLS MAXIMUM GRADE (%)	VERTICAL CURVE CONTROLS MINIMUM LENGTH (FT)	VERTICAL CURVE CONTROLS LENGTH CREST (FT)	VERTICAL CURVE CONTROLS LENGTH SAG (FT)
Major Thoroughfare	50	0.08	300	5	150	85A	75A
Apex Peakway	50	0.08	300	5	150	85A	75A
Minor Thoroughfare	50	0.08	200	5	150	85A	75A
Urban Collector	40	0.06	300	7	150	55A	55A
Urban Street	35	0.06	100	9	100	28A	28A
Minor Residential St.	30	normal crown	100	10	100	28A	28A
Cul-de-Sac	30	normal crown	100	10	50	18A	18A

NOTES:

"A" = Algebraic Difference In Grades

Design speed shall not be less than 5 mph greater than the posted speed.

The superelevation tables found in ***A Policy on Design of Urban Highways & Arterial Streets*** (latest edition) as published by AASHTO shall be used for determining the actual maximum superelevation rate - "e" for various radii.

A normal crown is defined as a parabolic crown with an average cross slope of ¼" per foot measured outward from the centerline of the street.

REVISIONS	
DATE	DESCRIPTION
6/93	NEW DETAIL

City of Oxford STANDARDS

PUBLIC STREET GEOMETRIC STANDARDS

STD. NO. 3.09

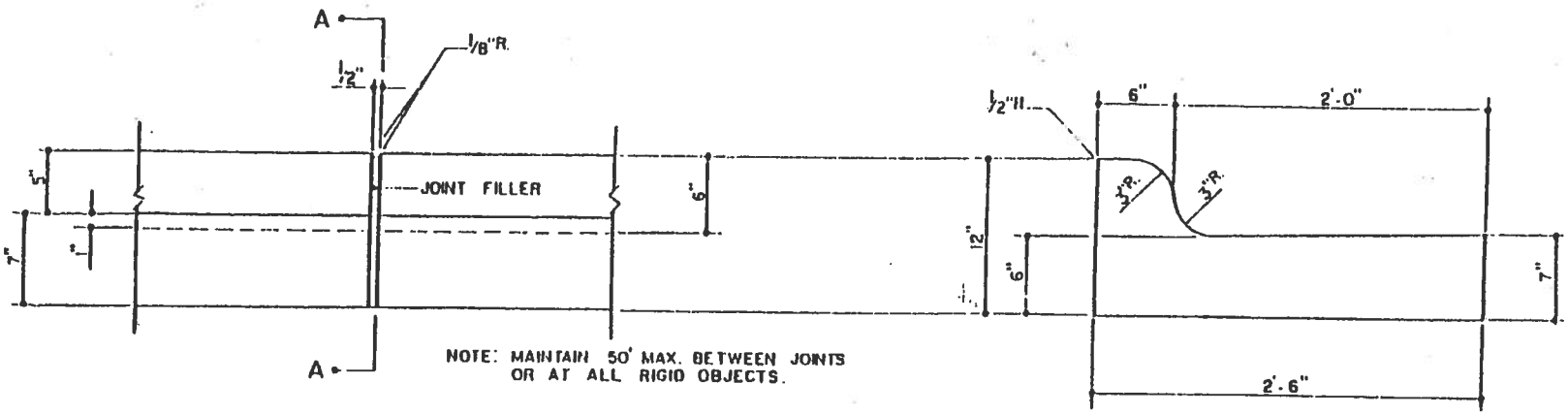

FRONT ELEVATION
TRANSVERSE EXPANSION JOINT

SECTION A-A
SIDE ELEVATION

COMBINATION CURB AND GUTTER

NOTE.

1.) CONCRETE SHALL BE 3,000 PSI.

2.) CONTRACTION JOINTS SHALL BE SPACED AT 10' INTERVALS. (A 15' SPACING WILL BE ALLOWED WHEN A MACHINE IS USED.)

3.) FINISH ALL CONCRETE WITH CURING COMPOUND.

REVISIONS	
DATE	DESCRIPTION

City of Oxford STANDARDS	STANDARD CONCRETE CURB AND GUTTER	STD. NO. 4.01

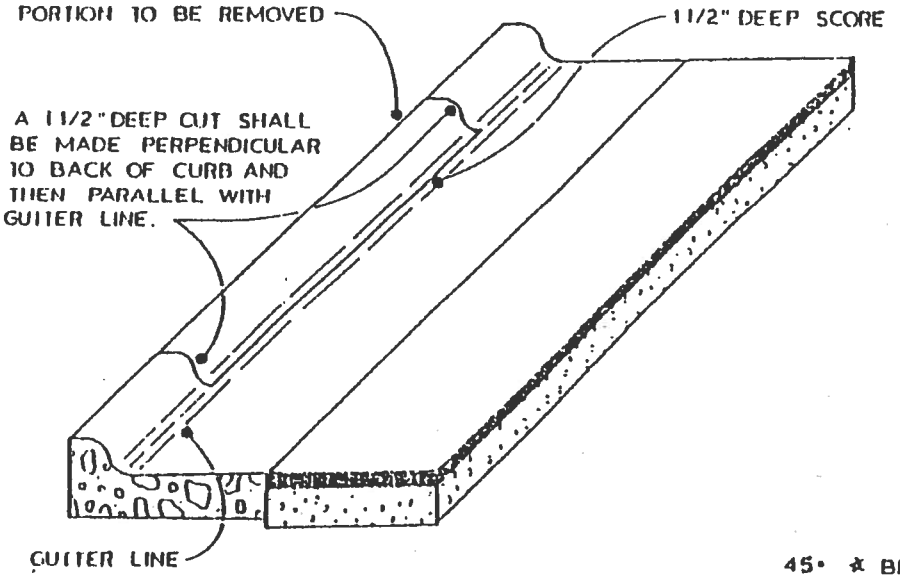

STEP ONE

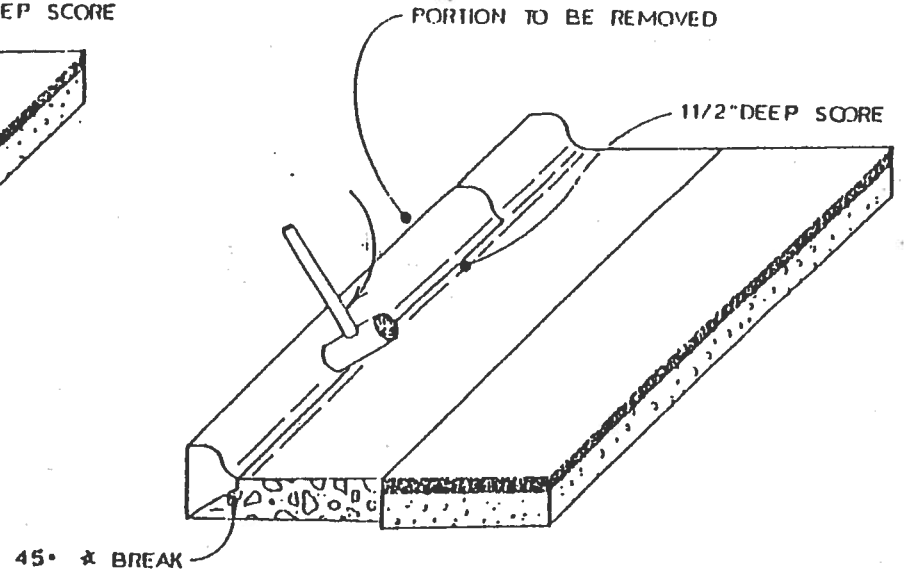

STEP TWO

NOTES:

1. IF PERPENDICULAR CUT IS WITHIN 5' FROM A JOINT, THEN THE PARALLEL CUT SHALL BE MADE TO THAT JOINT.
2. FOR REPAIRS TO CURB THE ENTIRE SECTION MUST BE REMOVED AND REPLACED. (JOINT TO JOINT)

REVISIONS	
DATE	DESCRIPTION

City of Oxford
STANDARDS

STANDARD METHOD OF REMOVING EXISTING CURB

STD. NO.
4.02

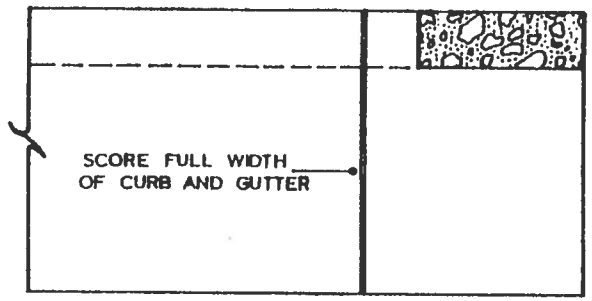

PLAN

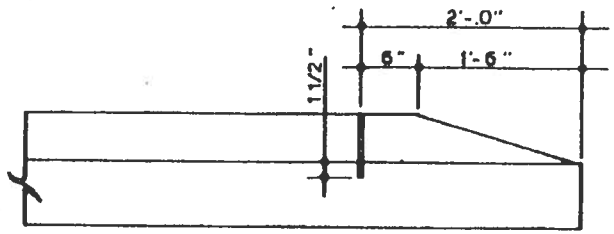

FRONT

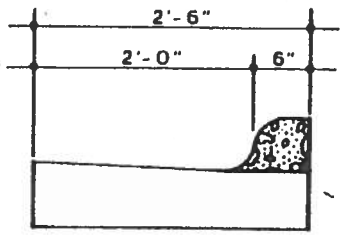

END

REVISIONS	
DATE	DESCRIPTION

City of Oxford STANDARDS	STANDARD METHOD OF ENDING CURB AND GUTTER	STD. NO. 4.03

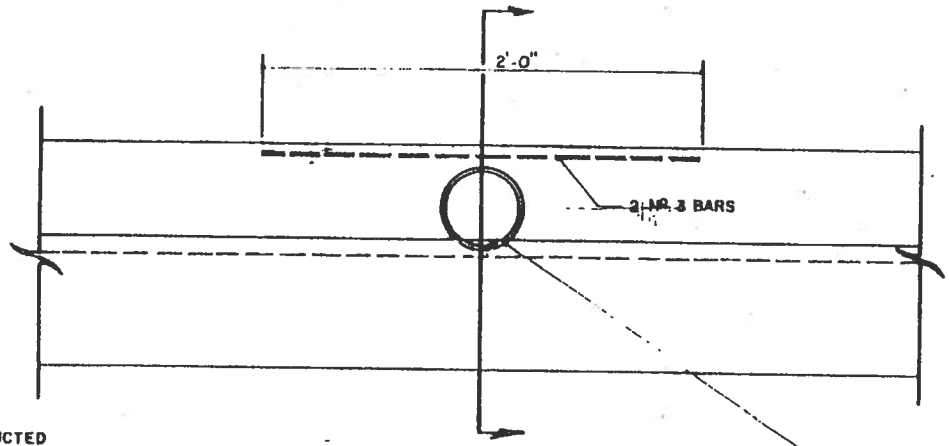

NOTES:

CURB DRAINS SHALL NOT BE CONSTRUCTED WITHIN 18" OF CONTRACTION OR EXPANSION JOINTS.

OPENING GRADE MAY VARY BETWEEN A MAXIMUM SLOPE OF 1/2" PER FT. AND A MINIMUM OF 1/4" PER FT.

MORE THAN ONE HOLE MAY BE INSTALLED PROVIDED THE HOLES ARE LOCATED WITH 18" MINIMUM SPACING.

THE EDGES OF THE DRAIN HOLE MUST BE ROUNDED AND FINISHED SMOOTH AT THE FACE OF THE CURB.

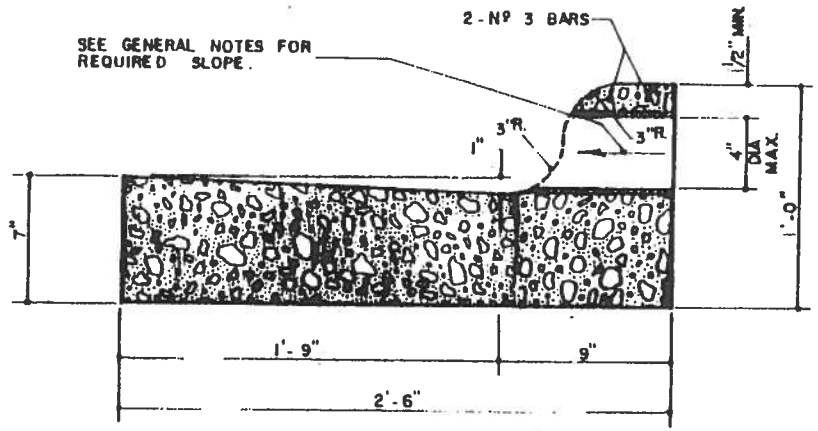

REVISIONS	
DATE	DESCRIPTION

City of Oxford STANDARDS

STANDARD CURB DRAIN

STD. Nº.

4.04

NOTES TO CONTRACTOR:

1. RESIDENTIAL DRIVEWAYS TO BE 12' TO 18' IN WIDTH.
2. COMMERCIAL & INDUSTRIAL DRIVEWAYS TO BE A MAX. OF 30' WIDE.
3. ALL CONCRETE SHALL BE 3000 PSI.
4. CURB RADIUS SHALL NOT RISE MORE THAN 1 INCH
5. IF CUT IS WITHIN 5' FROM A JOINT, THEN THE CUT SHALL BE MADE TO THAT JOINT.

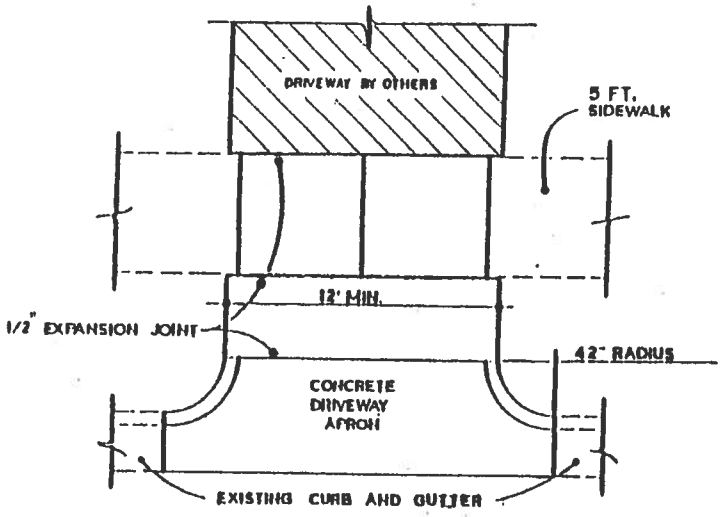

PLAN VIEW

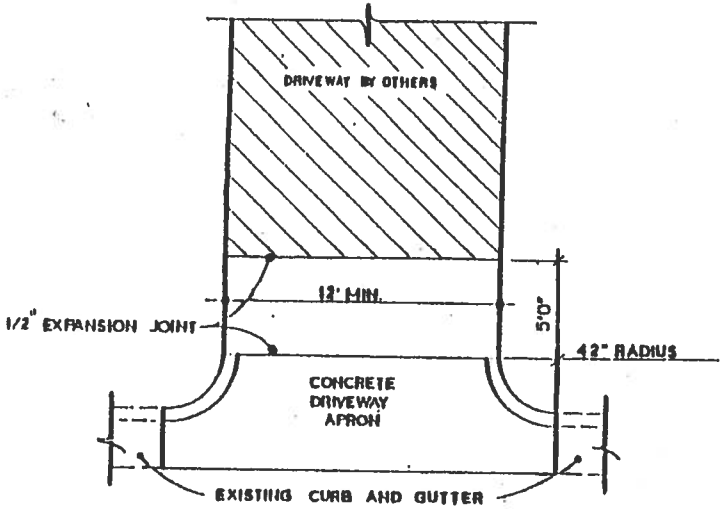

PLAN VIEW

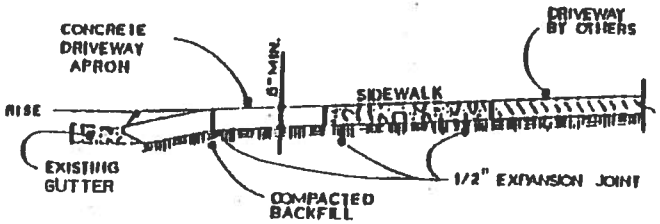

TYPICAL SECTION

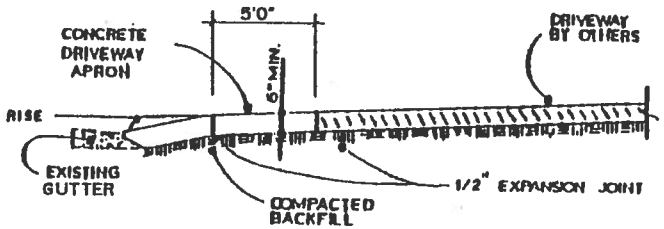

TYPICAL SECTION

REVISIONS	
DATE	DESCRIPTION

DRIVEWAY APRON WITH SIDEWALK

DRIVEWAY APRON WITHOUT SIDEWALK

City of Oxford STANDARDS

STANDARD DRIVEWAY APRON

STD. NO. 4.05

STATE OF NORTH CAROLINA
DEPT. OF TRANSPORTATION
DIVISION OF HIGHWAYS
RALEIGH, N.C.

7-06

ENGLISH STANDARD DRAWING FOR
DRIVEWAY TURNOUT
RADIUS TYPE

SHEET 1 OF 2
848.02

NOTES TO CONTRACTOR

1. RESIDENTIAL DRIVEWAYS TO BE 12' TO 24' IN WIDTH
2. COMMERCIAL & INDUSTRIAL DRIVEWAYS TO BE A MAX. OF 30' WIDE
3. ALL CONCRETE SHALL BE 3000 PSI
4. ALL CURB RADIUS SHALL NOT RISE MORE THAN 1 INCH
5. IF CUT IS WITHIN 5' FROM A JOINT, THEN THE CUT SHALL BE MADE TO THAT JOINT

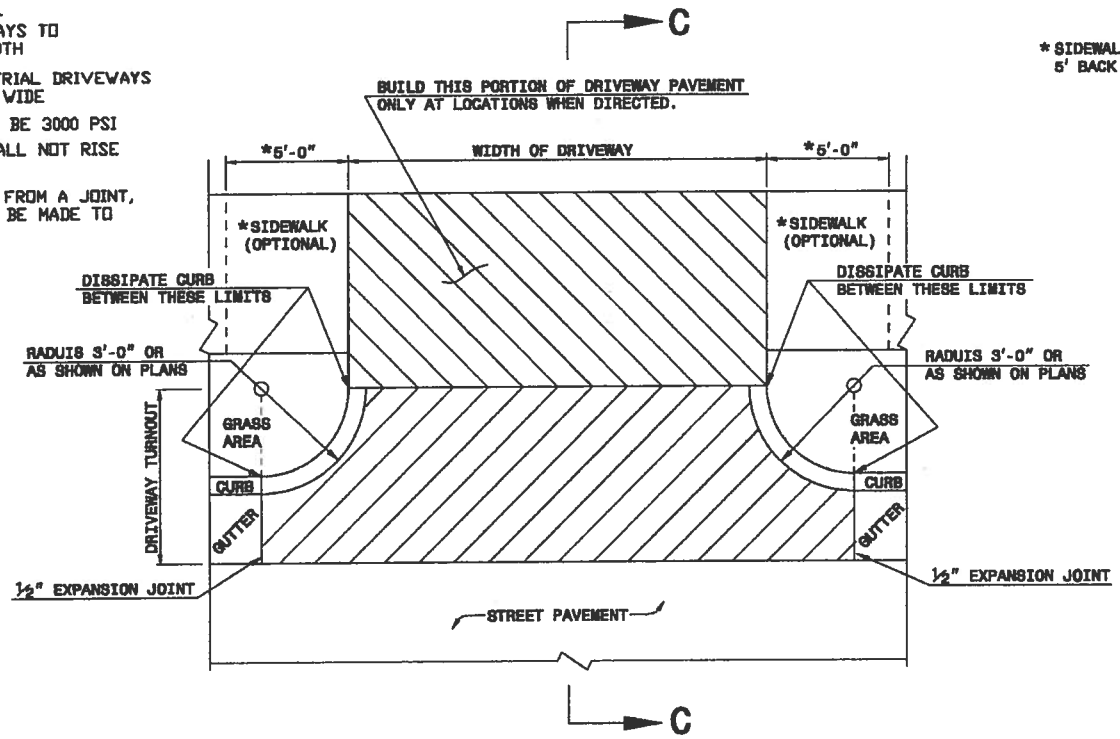

*SIDEWALK TAPERS DOWN 5' BACK FROM DRIVEWAY.

PLAN
DETAIL OF DRIVEWAY

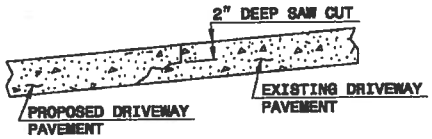

METHOD OF TIE IN

WHEN EXISTING DRIVEWAY PAVEMENT IS CONCRETE, SAW CUT 2" DEEP JOINT AT THE POINT OF TIE-IN. SAW JOINT PERPENDICULAR TO EDGE OF EXISTING DRIVEWAY PAVEMENT.

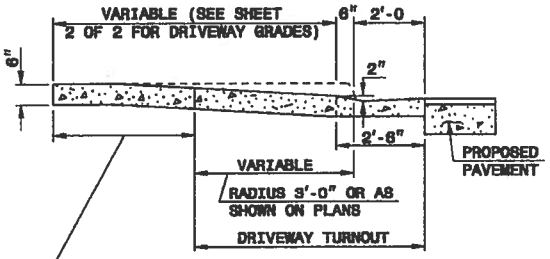

BUILD THIS PORTION OF DRIVEWAY PAVEMENT ONLY AT LOCATIONS WHEN DIRECTED.

SECTION C-C

STATE OF NORTH CAROLINA
DEPT. OF TRANSPORTATION
DIVISION OF HIGHWAYS
RALEIGH, N.C.

7-06

ENGLISH STANDARD DRAWING FOR
DRIVEWAY TURNOUT
RADIUS TYPE

SHEET 1 OF 2
848.02

CITY OF OXFORD STANDARDS STD. 4.05A

STATE OF NORTH CAROLINA
DEPT. OF TRANSPORTATION
DIVISION OF HIGHWAYS
RALEIGH, N.C.

7-06

ENGLISH STANDARD DRAWING FOR

DRIVEWAY TURNOUT

DRIVEWAY GRADES

SHEET 2 OF 2

848.02

DESIRABLE DRIVEWAY GRADES

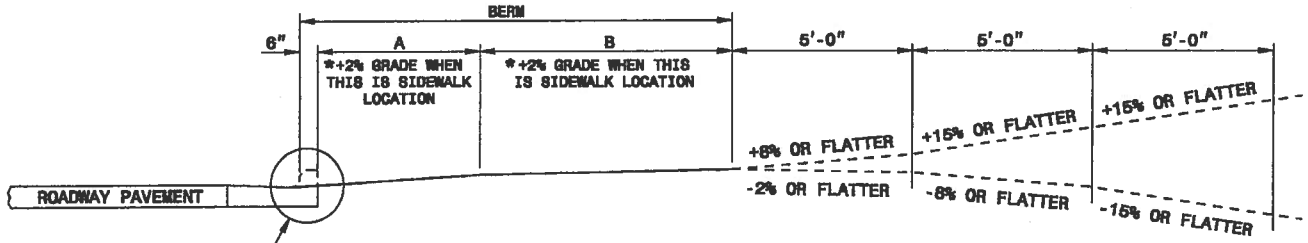

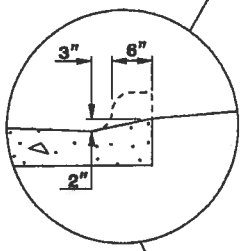

*SIDEWALK LOCATION
(DO NOT PLACE SIDEWALK ON BERMS LESS THAN 6' WIDE.)

DESIRABLE OR MAXIMUM DRIVEWAY GRADES				
BERM WIDTH	A		B	
	DIST.	GRADE	DIST.	GRADE
8' OR LESS	5'-0"	+2%*	2'-6"	+5%
8' OR LESS	2'-0"	+6%	5'-6"	+2%*
10'	4'-0"	+4%	5'-6"	+2%*
12' & OVER	4'-6"	+4%	7'-0"	+2%*

MAXIMUM DRIVEWAY GRADES

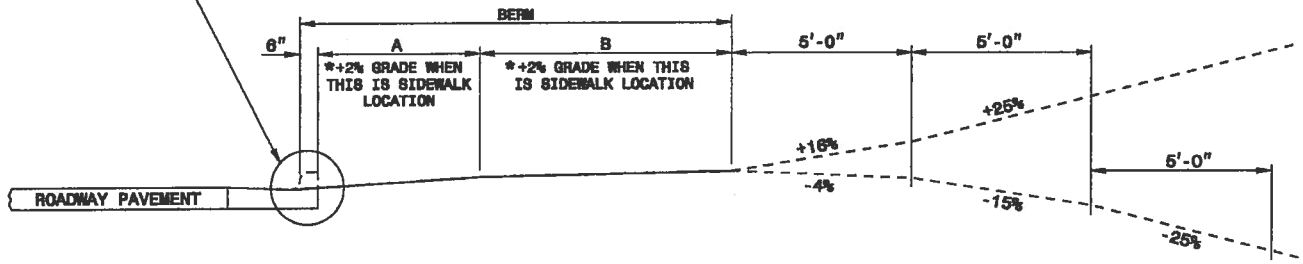

STATE OF NORTH CAROLINA
DEPT. OF TRANSPORTATION
DIVISION OF HIGHWAYS
RALEIGH, N.C.

7-06

ENGLISH STANDARD DRAWING FOR

DRIVEWAY TURNOUT

DRIVEWAY GRADES

SHEET 2 OF 2

848.02

CITY OF OXFORD STANDARDS STD. 4.05B

NOTES :

1.) TRANSVERSE EXPANSION JOINTS TO BE A MAXIMUM OF 50 FEET. (90' - EXTRUDED CURB)

2.) ALL CONCRETE TO BE FINISHED WITH CURING COMPOUND.

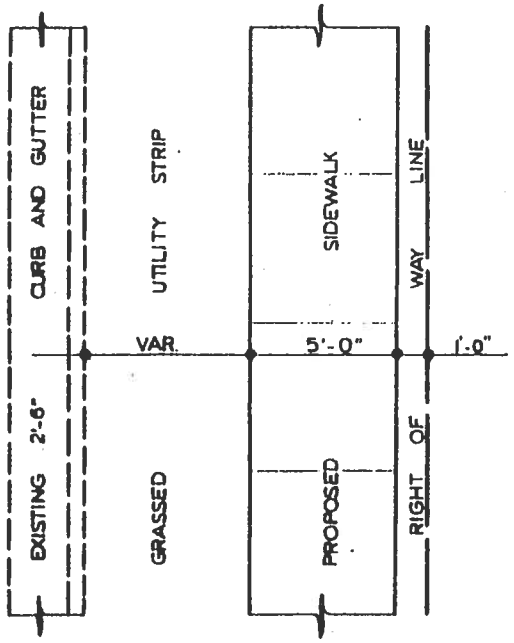

PLAN VIEW

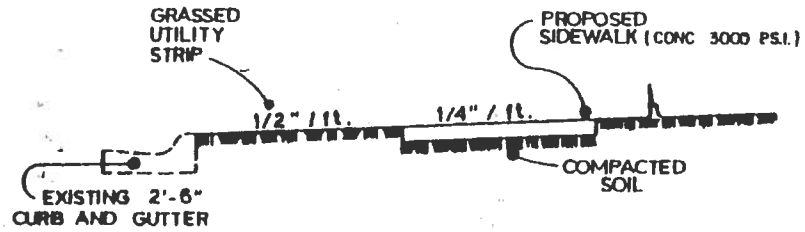

TYPICAL SECTION

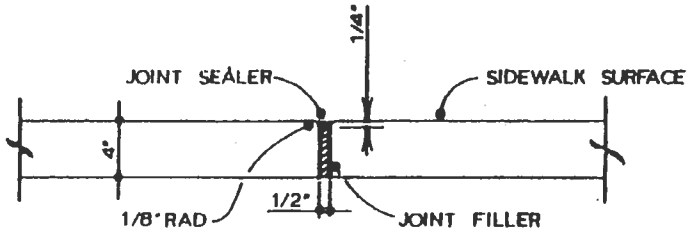

TRANSVERSE EXPANSION JOINT

REVISIONS	
DATE	DESCRIPTION

City of Oxford STANDARDS

STANDARD CONCRETE SIDEWALK

STD. Nº. 4.06

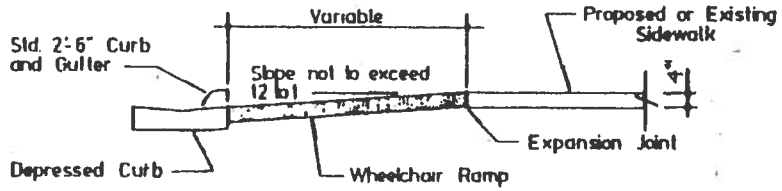

Section ZZ

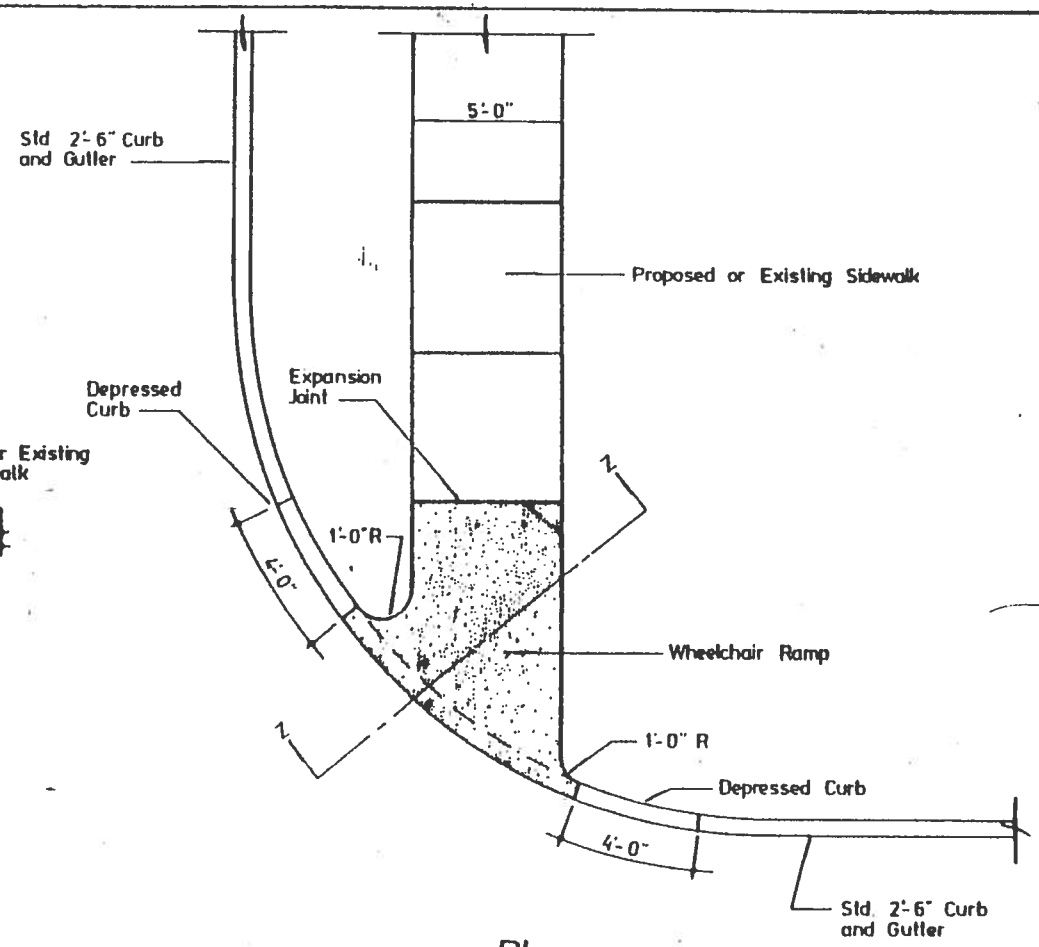

Plan

REVISIONS	
DATE	DESCRIPTION

City of Oxford STANDARDS

STANDARD WHEELCHAIR RAMP

SINGLE TYPE

STD. NO. 4.07

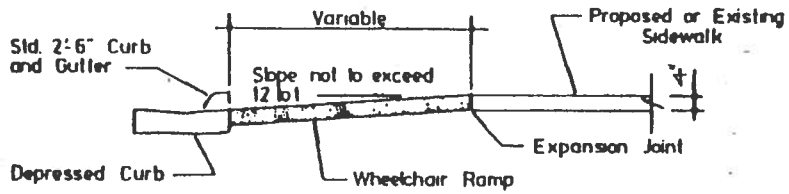

Section ZZ

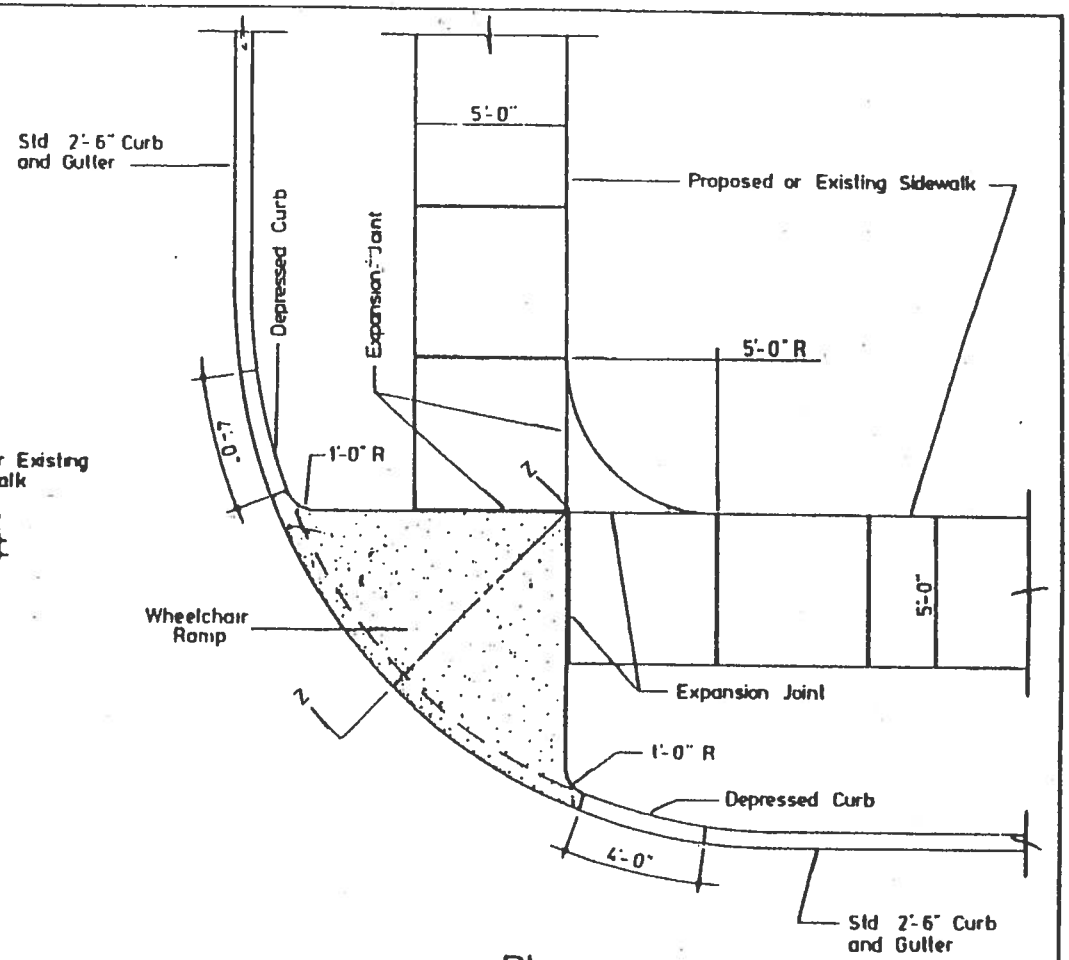

Plan

REVISIONS	
DATE	DESCRIPTION

City of Oxford STANDARDS

STANDARD WHEELCHAIR RAMP

DOUBLE TYPE

STD. NO. 4.08

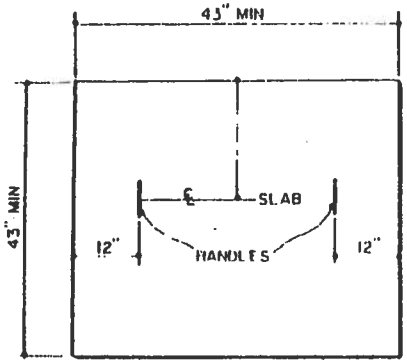

PRECAST CONC. SLAB

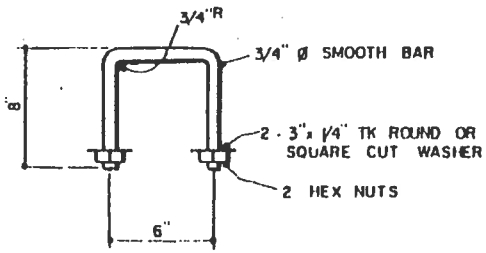

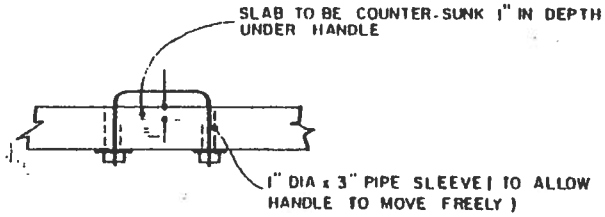

DETAIL OF HANDLE

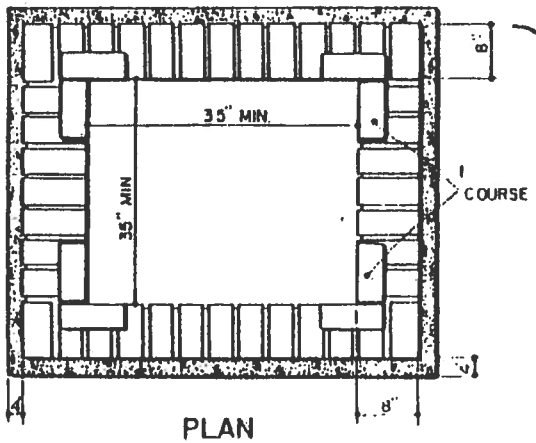

PLAN

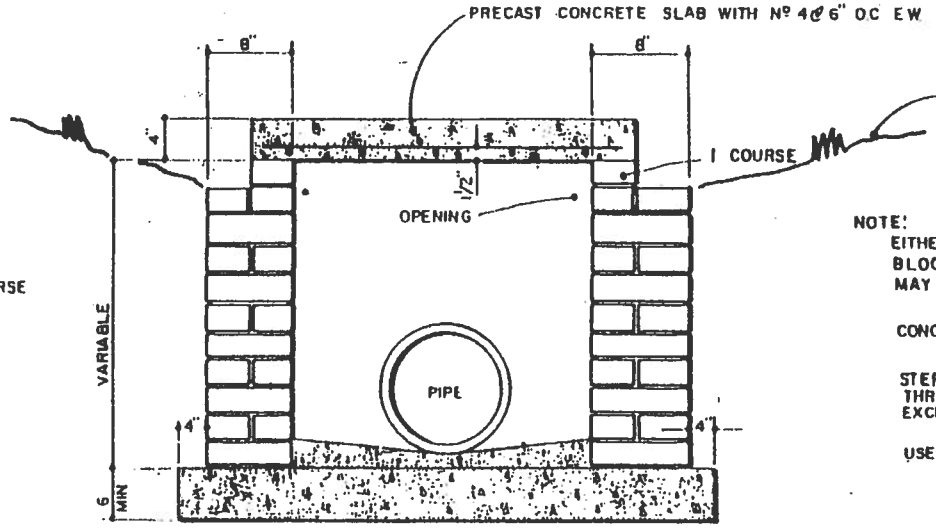

PROFILE

NOTE: INSIDE DIMENSION FOR 24" PIPE AND UP USE PIPE DIA PLUS 12"

NOTE:
EITHER SOLID BRICK, SOLID BLOCK, OR PRECAST CONCRETE MAY BE USED.

CONCRETE WALLS TO BE 6" THICK.

STEPS REQUIRED @ 16" O.C. THROUGHOUT WHERE DEPTH EXCEEDS 5'

USE ONLY 3000 P.S.I. CONC. MIX

REVISIONS	
DATE	DESCRIPTION
4/8/82	LOWERED TOP-1 COURSE BRICK

City of Oxford STANDARDS

STANDARD YARD INLET W/ CONCRETE SLAB

STD. Nº 5.01

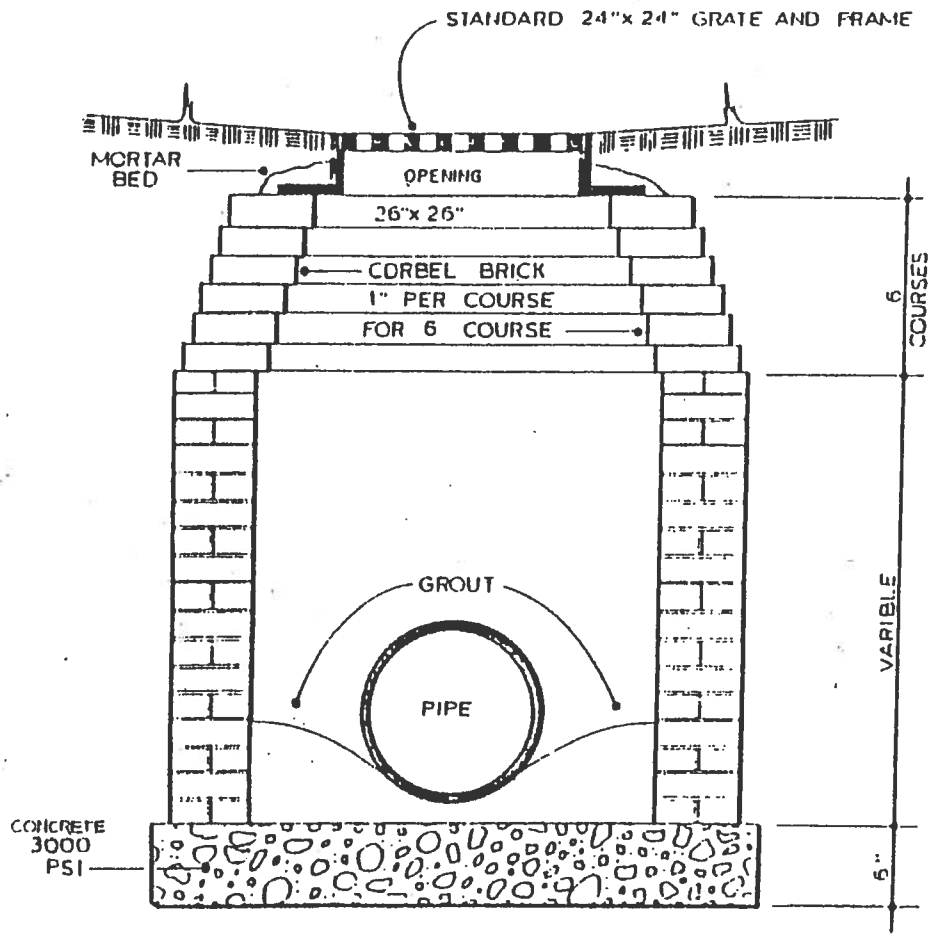

SECTION

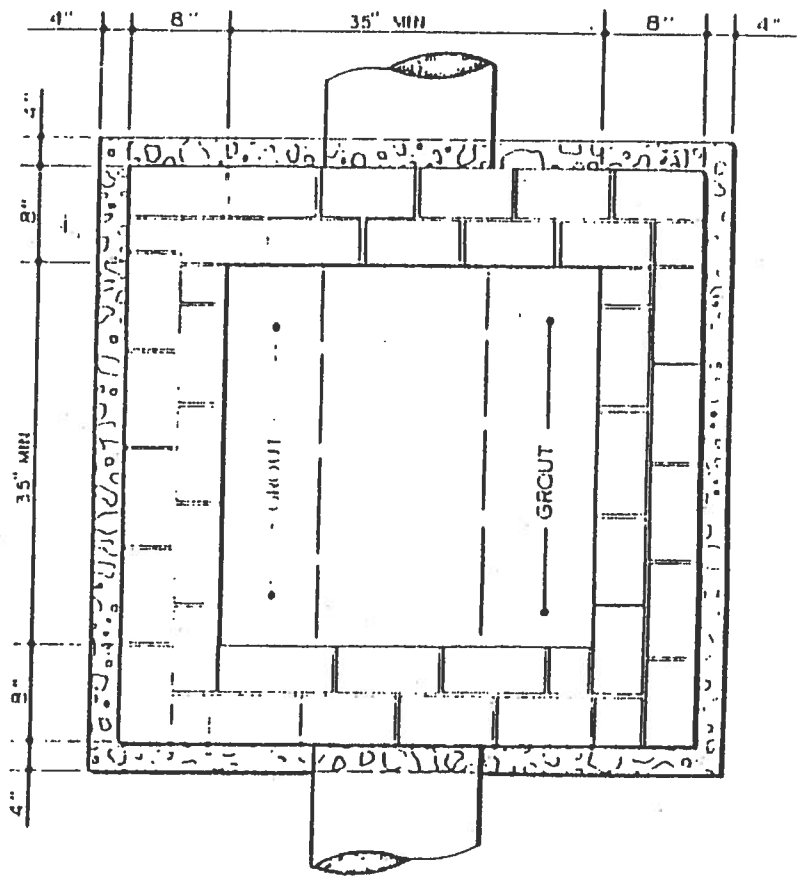

PLAN

NOTE :

EITHER SOLID BRICK, SOLID BLOCK, PRECAST CONCRETE OR CONCRETE MAY BE USED.

FOR 24" R.C.P. AND LARGER USE PIPE DIA PLUS 12" FOR MINIMUM INSIDE DIMENSION.

REVISIONS	
DATE	DESCRIPTION

City of Oxford STANDARDS

STANDARD YARD INLET WITH GRATE AND FRAME

STD. NO. 5.02

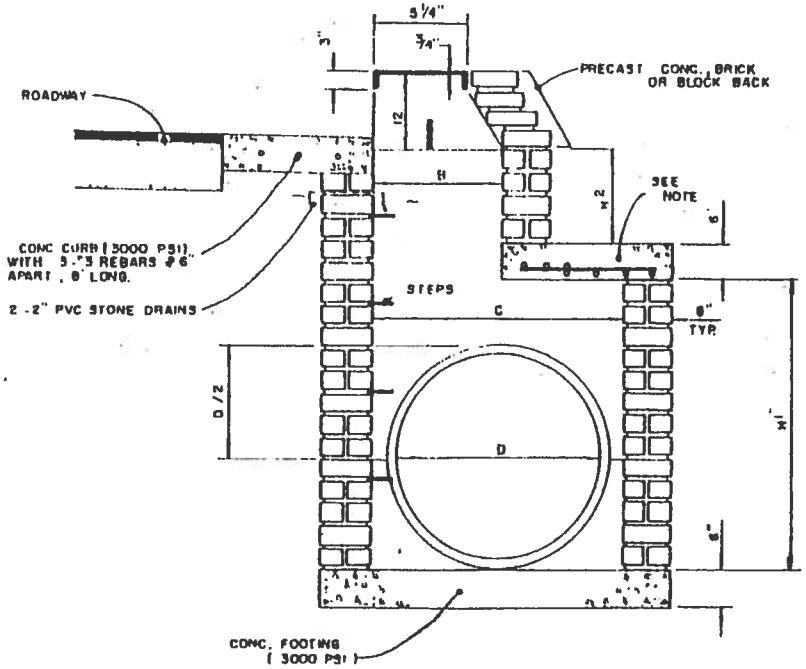

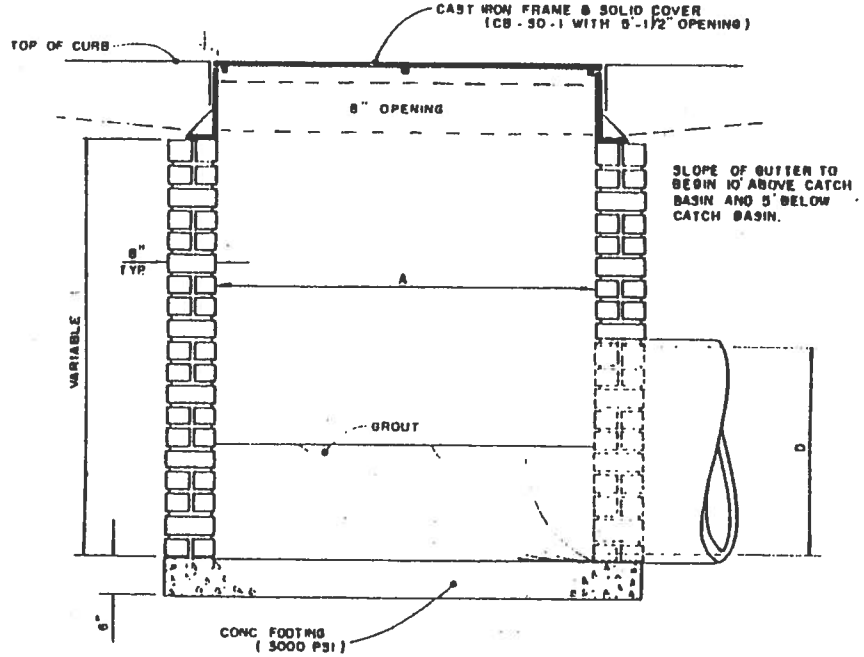

NOTE:
SLAB SHALL BE REQUIRED FOR PIPE SIZES 24" TO 54" (SEE SHT. 2 OF 2 FOR TABLE OF DIMENSIONS)

REVISIONS	
DATE	DESCRIPTION

SHT. 1 OF 2

City of Oxford STANDARDS

STANDARD OPEN-THROATED CATCH BASIN

STD. Nº. 5.03

CB-SO-1 5' WIDE

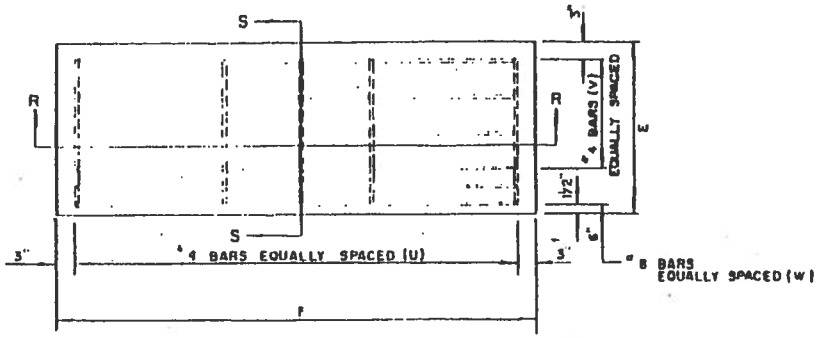

PLAN OF TOP SLAB

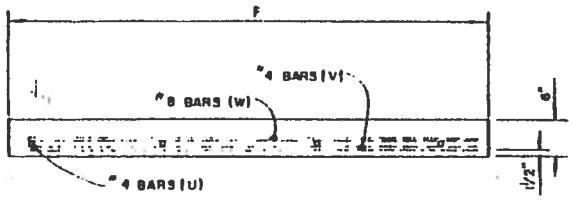

SECTION RR

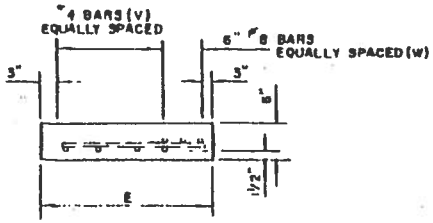

SECTION SS

DIMENSIONS AND QUANTITIES FOR BRICK CATCH BASINS														
DIMENSIONS OF BOX AND PIPE						COVER DIMENSIONS		REINFORCING						
PIPE	SPAN	WIDTH	WIDTH	HEIGHT	HEIGHT			BARS-U		BARS-V		BARS-W	
D	A	B	C	NN [1]	H [2]	E	F	Nº	LENGTH	Nº	LENGTH	Nº	LENGTH
15"	5'-1/2"	1'-9/8"	1'-9/8"	2'-6"									
18"			1'-9/8"	2'-10"									
24"			2'-4"	3'-4"		1'-3"	6'-5/2"	4	10½"	3	6'-4 5/8"	3	6'-4 5/8"
30"			3'-4"	3'-2"		2'-3"			1'-10½"	3			
36"			3'-10"	3'-8"		2'-9"			2'-4½"	4			
42"			4'-5"	4'-4"		3'-4"			2'-11½"	3			
48"			5'-0"	4'-10"		3'-11"			3'-6½"	4			
54"	5'-1/2"	1'-9/8"	5'-7"	5'-4"		4'-6"	6'-5/2"	4	4'-1½"	6	6'-4 5/8"	3	6'-4 5/8"

REVISIONS	
DATE	DESCRIPTION

SHT. 2 OF 2

City of Oxford STANDARDS

STANDARD OPEN-THROATED CATCH BASIN

STD. Nº.

5.03

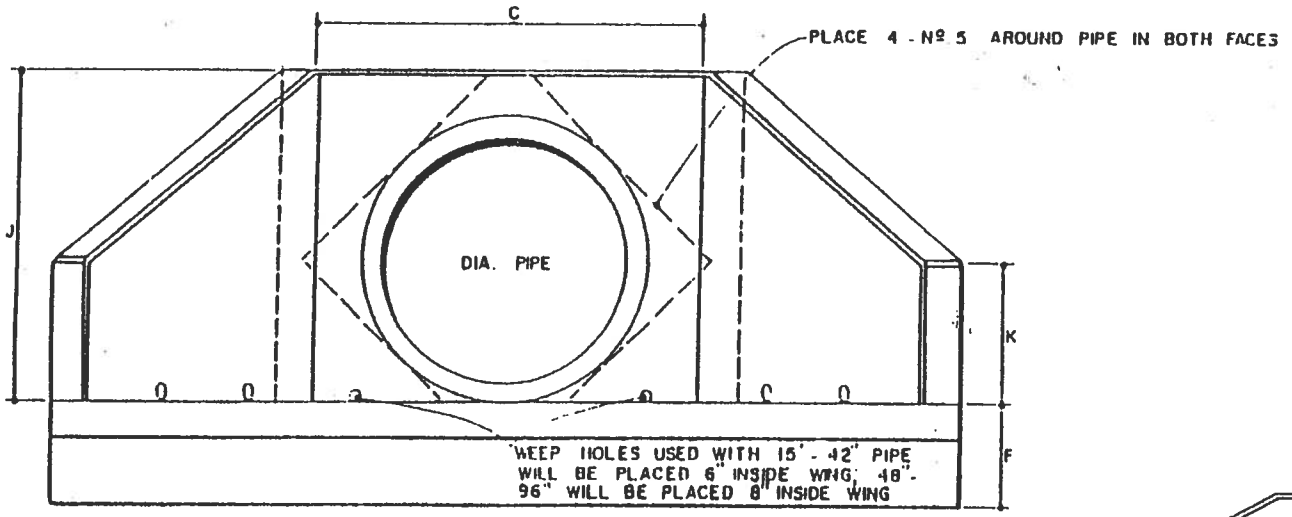

FRONT ELEV.

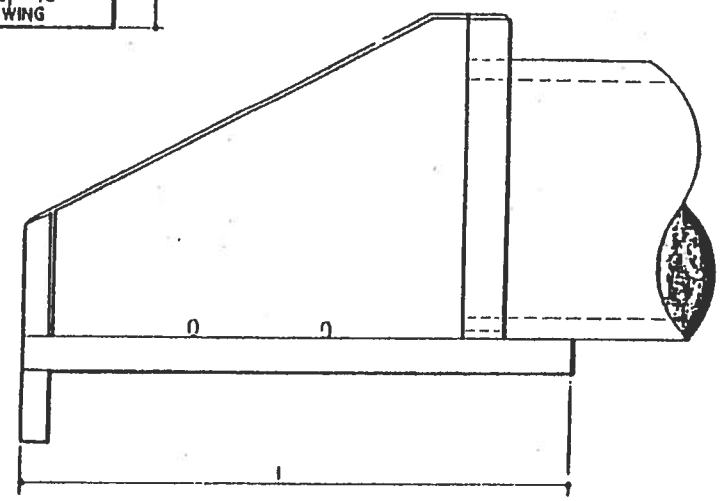

SIDE ELEV.

SEE STD Nº 5.07
FOR DIMENSIONS

NOTE :

1 CUBIC FOOT OF WASH STONE REQUIRED BEHIND EACH WEEP HOLE.

REVISIONS	
DATE	DESCRIPTION

SHEET 1 OF 2

City of Oxford
STANDARDS

STANDARD REINFORCED CONCRETE HEADWALL W/ WING WALLS

STD. NO.
5.04

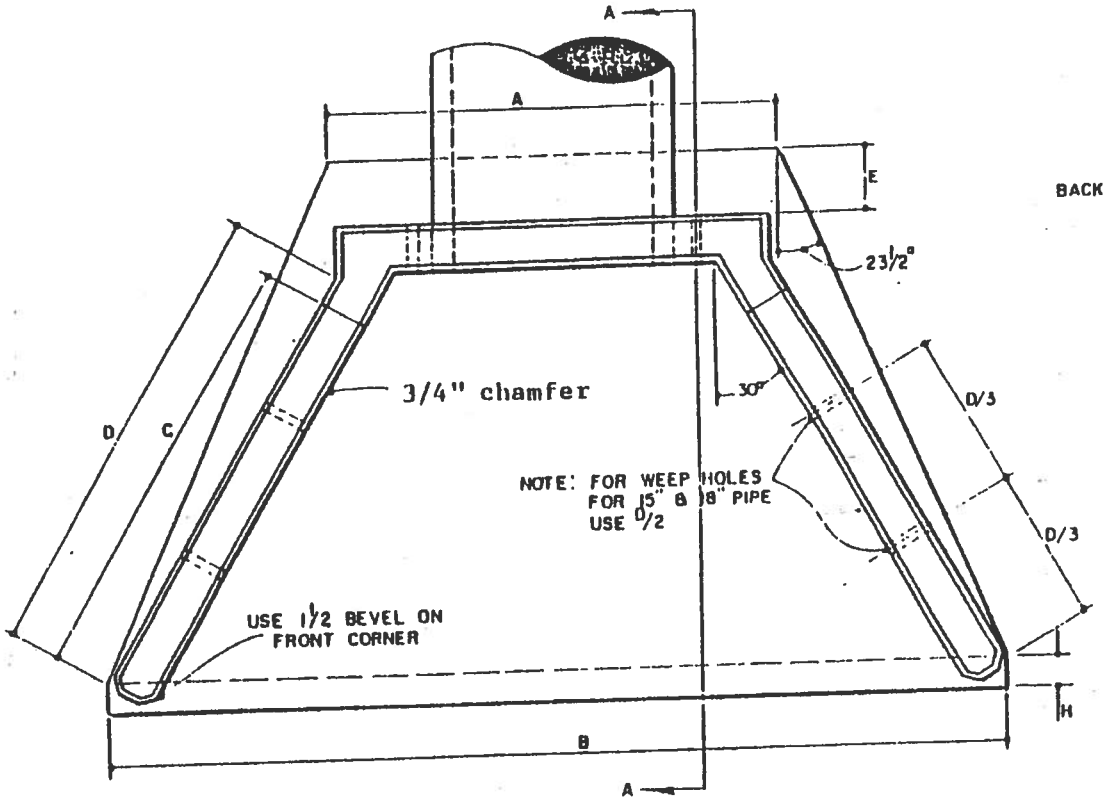

TOP VIEW

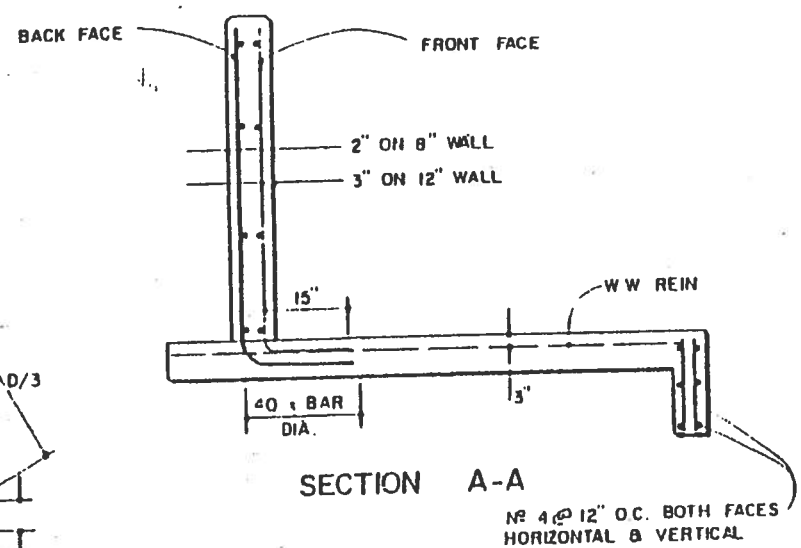

SECTION A-A

NOTE: SEE STD. Nº 5.07
FOR DIMENSIONS

REVISIONS	
DATE	DESCRIPTION

SHEET 2 OF 2

City of Oxford
STANDARDS

STANDARD REINFORCED CONCRETE HEADWALL W/ WING WALLS

STD. NO.
5.04

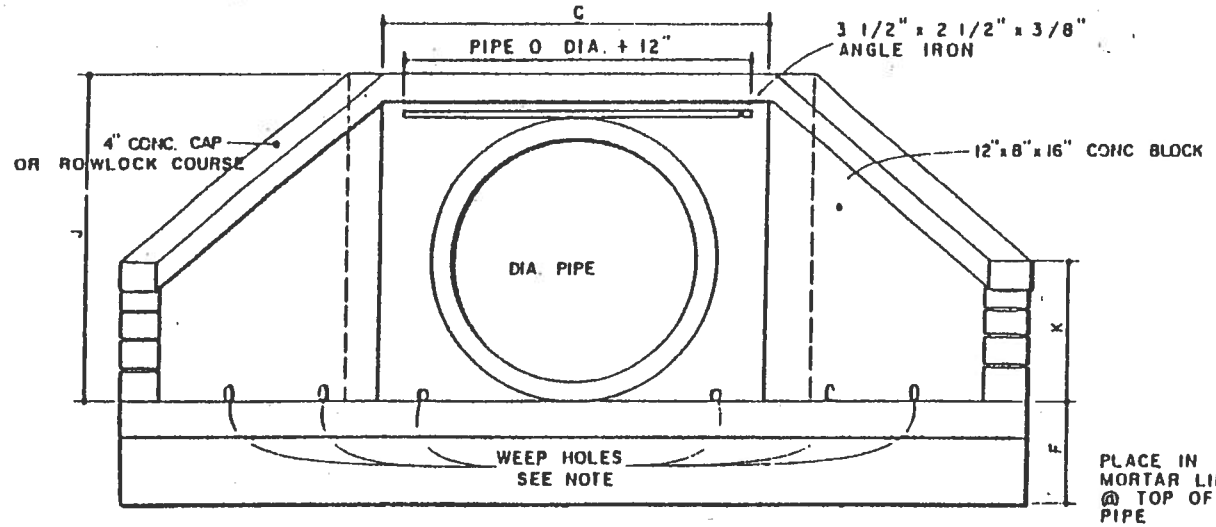

FRONT ELEVATION

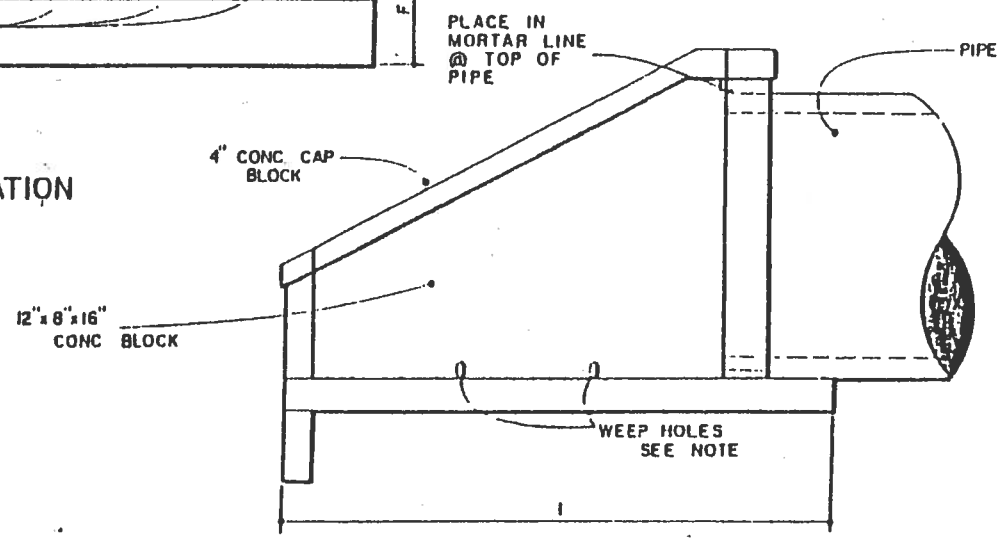

SIDE ELEVATION

NOTES:

1 CUBIC FOOT OF WASHED STONE REQUIRED BEHIND EACH WEEP HOLE

WEEP HOLES USED WITH 15" - 42" PIPE SHALL BE PLACED 6" INSIDE WING
48" - 96" PIPE SHALL BE PLACED 8" INSIDE WING

NOTE:
SEE STANDARD NO. 5.07 FOR DIMENSIONS.

REVISIONS	
DATE	DESCRIPTION

SHEET 1 OF 2

City of Oxford STANDARDS

STANDARD CONCRETE BLOCK HEADWALL WITH WING WALLS

STD. NO. 5.05

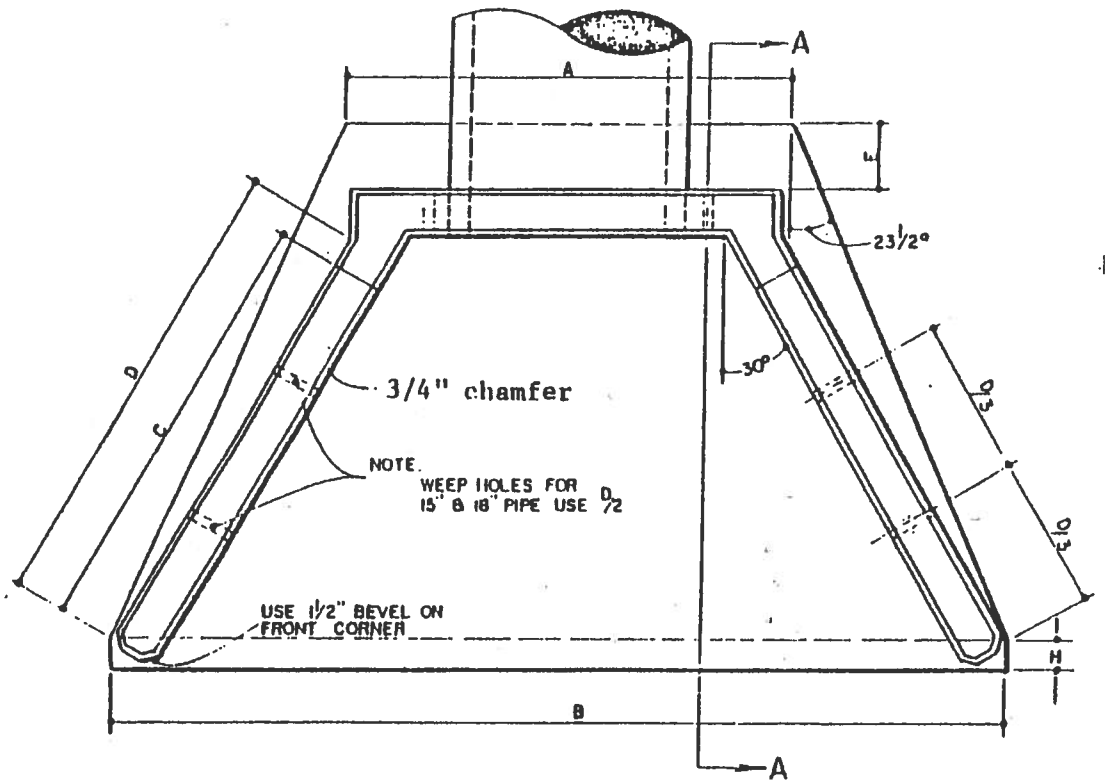

TOP ELEVATION

NOTE
SEE STANDARD NO. 5.07
FOR DIMENSIONS.

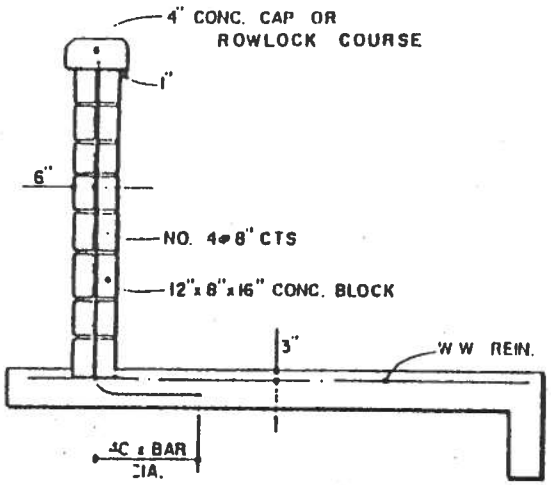

TYPICAL SECTION A-A

NOTE
FILL EVERY CAVITY COMPLETELY WITH 3000 PSI CONC.
CONC SHALL NOT FALL MORE THAN THE HEIGHT OF 5
LAYERS OF BLOCK.

REVISIONS	
DATE	DESCRIPTION

SHEET 2 OF 2

City of Oxford
STANDARDS

STANDARD CONCRETE BLOCK HEADWALL WITH WING WALLS

STD. NO.
5.05

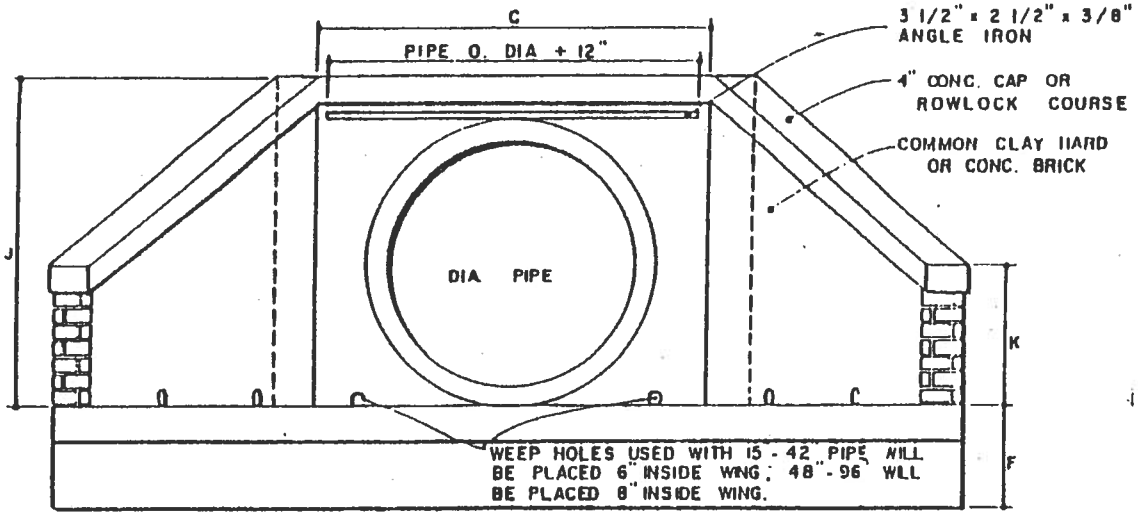

FRONT ELEV.

NOTE: ADD THESE DIMENSIONS TO OVERALL DIMENSIONS ON STD Nº. 8.11 FOR BRICK HEADWALLS.

COMMON DIM		
D	L	M
15"	2'-5"	1'-8"
18"	2'-8"	1'-8"
24"	3'-4"	2'-0"
30"	3'-9"	2'-4"
36"	4'-3"	2'-4"
42"	4'-11"	2'-8"
48"	5'-7"	3'-0"

THESE DIMENSIONS ARE FOR END ELEV FOR BRICK HW. FOR 48" R.C.P & UNDER

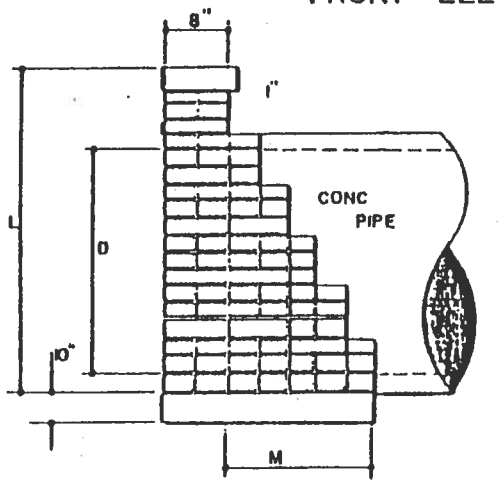

END ELEV.

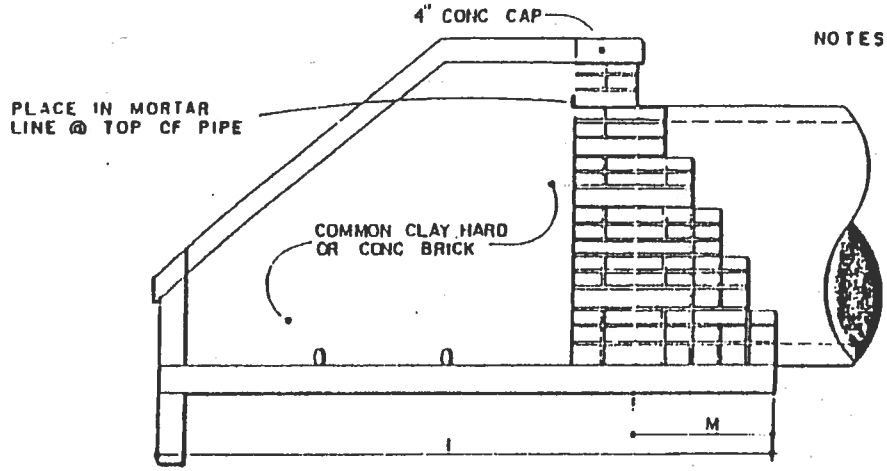

SIDE ELEV.

NOTES:
1. SEE STD. No. 5.07 FOR DIMENSIONS
2. ANGLE IRON SUPPORT AS SHOWN, SHALL BE REQUIRED ONLY WHEN CORRUGATED METAL PIPE IS USED
3. 1 CUBIC FOOT OF WASHED STONE REQUIRED BEHIND EACH WEEP HOLE.

REVISIONS	
DATE	DESCRIPTION

SHEET 1 OF 2

City of Oxford STANDARDS

STANDARD BRICK HEADWALL WITH WING WALLS

48" R.C.P AND UNDER (WITHOUT REIN. STEEL)

STD. NO. 5.06

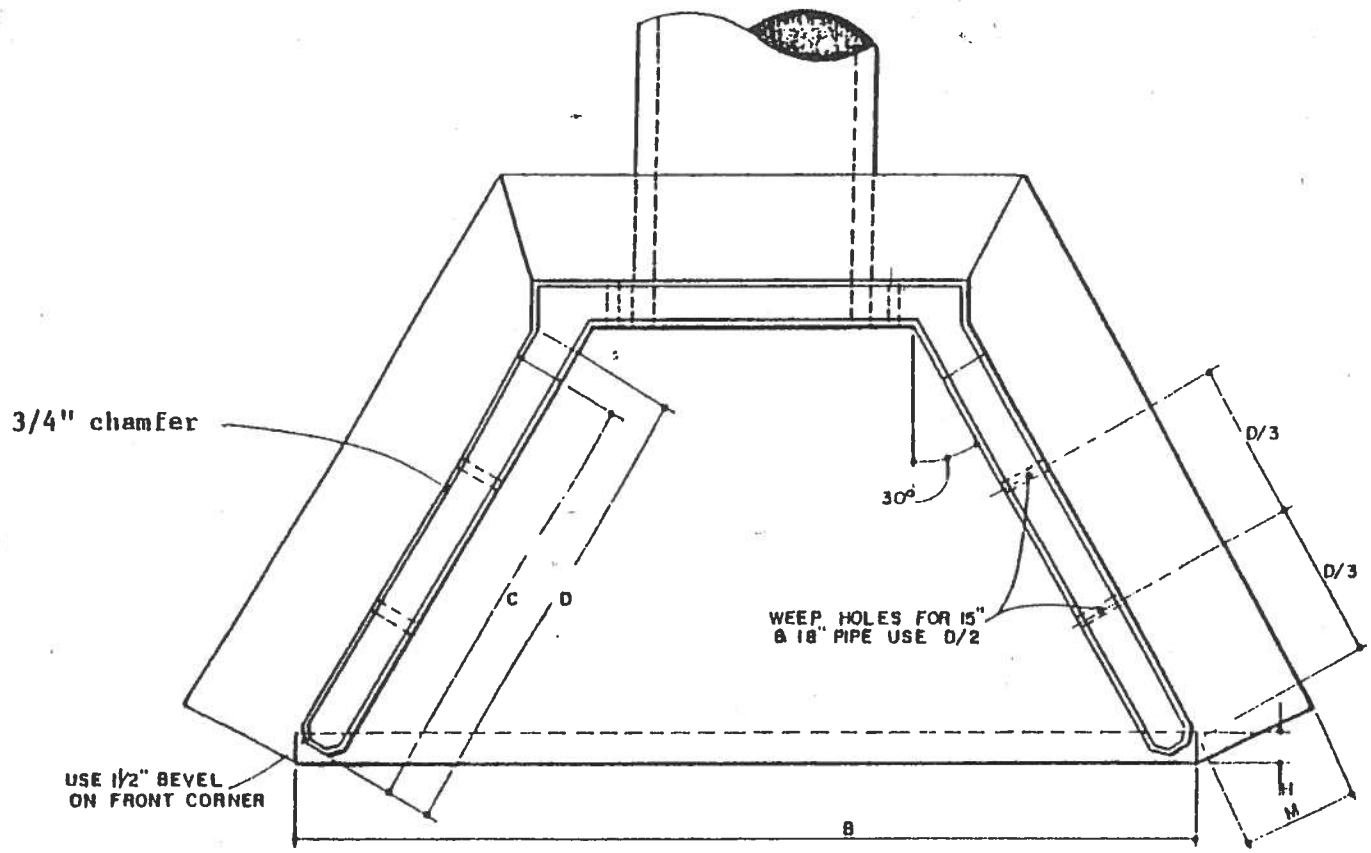

TOP VIEW

SEE STD Nº 5.07 FOR DIMENSIONS

REVISIONS	
DATE	DESCRIPTION

SHEET 2 OF 2

City of Oxford STANDARDS

STANDARD BRICK HEADWALL WITH WING WALLS

48" R.C.P AND UNDER (WITHOUT REIN. STEEL)

STD. NO. 5.06

SINGLE PIPE HEADWALLS

Pipe Size	Shell Thickness	Wall Thickness	Slab Thickness	A	B	C	D	E	F	G	H	I	J	K
15"	2½"	8"	6"	4'-10"	9'-4"	3'-7"	4'2"	1'0"	1'6"	3'8"	8"	5'8"	2'7"	1'0"
18"	2½"	8"	6"	5'-5"	10'-5"	3'-11"	4'11"	1'0"	1'6"	4'5"	6"	6'3"	2'11"	1'0"
24"	3"	8"	6"	6'-4"	12'-4"	4'-6"	6'3"	1'0"	1'6"	5'9"	6"	7'5"	3'6"	1'0"
30"	3½"	8"	6"	7'-3"	14'-3"	5'-1"	7'7"	1'0"	1'6"	7'1"	6"	8'7"	4'1"	1'0"
36"	4"	8"	6"	7'-5"	15'-1"	5'-8"	7'10"	1'6"	2'0"	7'4"	6"	9'4"	4'8"	1'6"
42"	4½"	9"	6"	8'-4"	17'-0"	6'-3"	9'2"	1'6"	2'0"	8'8"	6"	10'6"	5'3"	1'6"
48"	5"	8"	6"	9'-4"	18'-11"	6'-10"	10'6"	1'6"	2'0"	10'0"	6"	11'7"	5'10"	1'6"
54"	5½"	8"	6"	10'-1"	19'-9"	7'-5"	10'9"	1'6"	2'0"	10'3"	8"	11'10"	6'5"	2'0"
60"	6"	12"	6"	10'-10"	22'-5"	8'-0"	12'1"	2'0"	2'6"	11'7"	8"	14'0"	7'0"	2'0"
66"	6½"	12"	8"	11'-9"	24'-4"	8'-7"	13'5"	2'0"	2'6"	12'11"	8"	15'2"	7'7"	2'0"
72"	7"	12"	8"	12'-5"	25'-1"	9'-2"	13'7"	2'0"	2'6"	13'1"	8"	15'3"	8'2"	2'6"
78"	7½"	12"	8"	13'-4"	27'-0"	9'-9"	14'11"	2'0"	2'6"	14'5"	8"	16'5"	8'9"	2'6"
84"	8"	12"	8"	13'-11"	27'-9"	10'-4"	15'1"	2'0"	2'6"	14'7"	8"	16'7"	9'4"	3'0"
90"	8½"	12"	8"	14'-10"	29'-9"	10'11"	16'6"	2'0"	2'6"	16'0"	8"	17'10"	9'11"	3'0"
96"	9"	12"	10"	15'-10"	30'-6"	11'6"	16'8"	2'0"	2'6"	16'2"	12"	17'11"	10'6"	3'6"
102"	9½"	14"	10"	16'-11"	32'-10"	12'1"	18'0"	2'0"	2'6"	17'6"	12"	19.4"	11'1"	3'6
108"	10"	14"	10"	17'-6"	33'-8"	12'8"	18'3"	2'0"	2'6"	17'9"	12"	19'7"	11'8"	4'0"
114"	10½"	16"	10"	18'5"	35'10"	13'3"	19'7"	2'0"	2'5"	19'1"	12"	21'0"	12'3"	4'0"
120"	11"	16"	10"	19'5"	37'-10"	13'10"	20'11"	2'0"	2'6"	20'0"	12"	22'2"	12'10"	4'0"

REVISIONS	
DATE	DESCRIPTION

SHEET 1 OF 2

City of Oxford
STANDARDS

DIMENSIONS FOR HEADWALL WITH WING WALLS

STD. NO.
5.07

SINGLE PIPE HEADWALL

PIPE SIZE	BACK FACE WALL REINFORCEMENT HORIZONTAL	BACK FACE WALL REINFORCEMENT VERTICAL	SLAB REINFORCEMENT	FRONT FACE TEMP. REINF. IN FRONT FACE OF WALLS	CUBIC YARDS OF CONCRETE
15"	Nº 3 @ 12" O.C.	Nº 3 @ 12" O.C.	6-6 x 10-10 WIRE MESH REINF.	Nº 4 @ 18 HOR. AND VER.	1.61
18"	"	"	"	"	1.96
24"	"	"	"	"	2.67
30"	"	"	"	"	3.49
36"	"	"	"	"	4.21
42"	"	"	"	"	4.90
48"	"	"	"	"	6.33
54"	"	Nº 4 @ 12" O.C.	"	"	7.23
60"	"	"	"	"	11.25
66"	Nº 4 @ 12" O.C.	"	6-6 x 6-6 WIRE MESH REINF.	"	14.67
72"	"	"	"	"	15.75
78"	"	"	"	Nº 4 @ 12" HOR. AND VERT.	18.04
84"	"	Nº 5 @ 12" O.C.	"	"	19.32
90"	"	"	"	"	21.92
96"	Nº 5 @ 12" O.C.	Nº 6 @ 12" O.C.	"	"	26.38
102"	"	Nº 6 @ 10" O.C.	"	"	32.26
108"	"	"	"	"	34.21
114"	"	Nº 8 @ 12" O.C.	"	"	40.78
120"	"	"	"	"	44.97

DOUBLE PIPE HEADWALL

A	B	C	L	CUBIC YARDS OF CONCRETE
8'-6"	13'-0"	7'-3"	8'-9"	2.24
9'-4"	14'-4"	7'-10"	9'-5"	2.70
10'-10"	16'-10"	9'-0"	10'-7"	3.64
12'-4"	19'-4"	9'-2"	11'-3"	4.72
13'-1"	20'-9"	11'-4"	12'-11"	5.75
14'-7"	23'-3"	12'-6"	14'-1"	7.05
16'-2"	25'-9"	13'-8"	15'-3"	8.52
17'-6"	27'-2"	14'-10"	16'-5"	9.74
18'-10"	30'-5"	16'-0"	18'-4"	14.74
20'-4"	32'-11"	17'-2"	19'-6"	19.44
21'-7"	34'-3"	18'-4"	20'-8"	20.96
23'-1"	36'-9"	19'-6"	21'-10"	23.89
24'-3"	38'-1"	20'-8"	23'-0"	25.59
25'-9"	40'-8"	21'-10"	24'-2"	28.95
27'-4"	42'-0"	23'-0"	25'-4"	35.30
29'-0"	44'-11"	24'-2"	26'-11	42.53
30'-2"	46'-4"	25'-4"	28'-1"	45.15
31'-8"	49'-1"	26'-6"	29'-6"	53.26
33'-3"	51'-8"	27'-8"	30'-9"	58.59

NOTE: ALL DIMENSIONS FOR WING WALLS SHALL BE AS SHOWN FOR SINGLE PIPE HEADWALLS.

THE DISTANCE BETWEEN PIPES IN A DOUBLE PIPE H.W. IS 2 FT.

REVISIONS	
DATE	DESCRIPTION

SHEET 2 OF 2

City of Oxford
STANDARDS

DIMENSIONS FOR HEADWALL WITH WING WALLS

STD. NO.
5.07

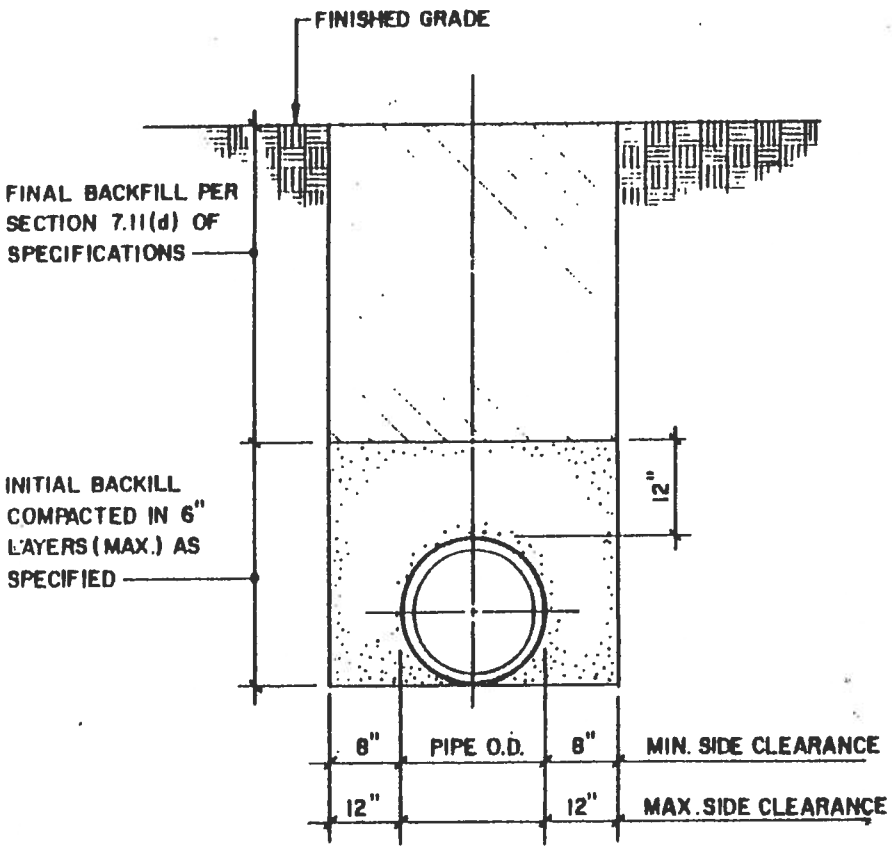

CLASS "D" BEDDING

REQ'D. FOR VITRIFIED CLAY, DUCTILE IRON, CAST IRON SOIL, & REINFORCED CONCRETE PIPES

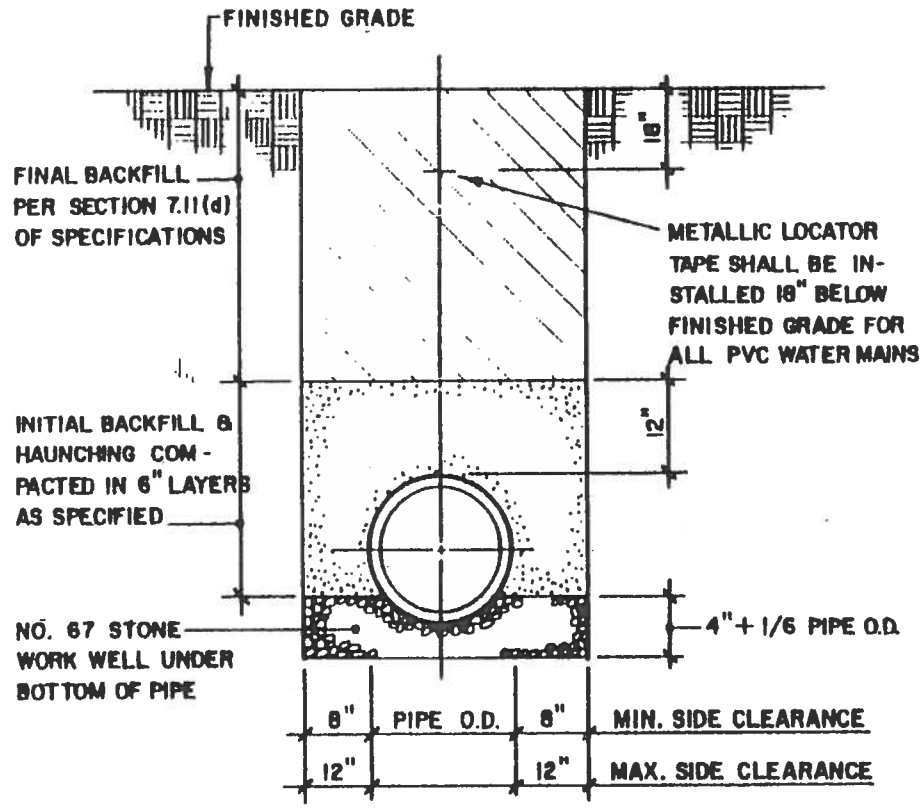

CLASS "C" BEDDING

REQUIRED FOR C-900 PVC PIPE

REVISIONS	
DATE	DESCRIPTION

NOTE:

FOR TRENCHES REQUIRING SHORING & BRACING, DIMENSIONS SHALL BE TAKEN FROM THE INSIDE FACE OF THE SHORING & BRACING.

City of Oxford
STANDARDS

PIPE BEDDING & BACKFILLING/CLASS "D" & "C"

STD. NO.
6.01

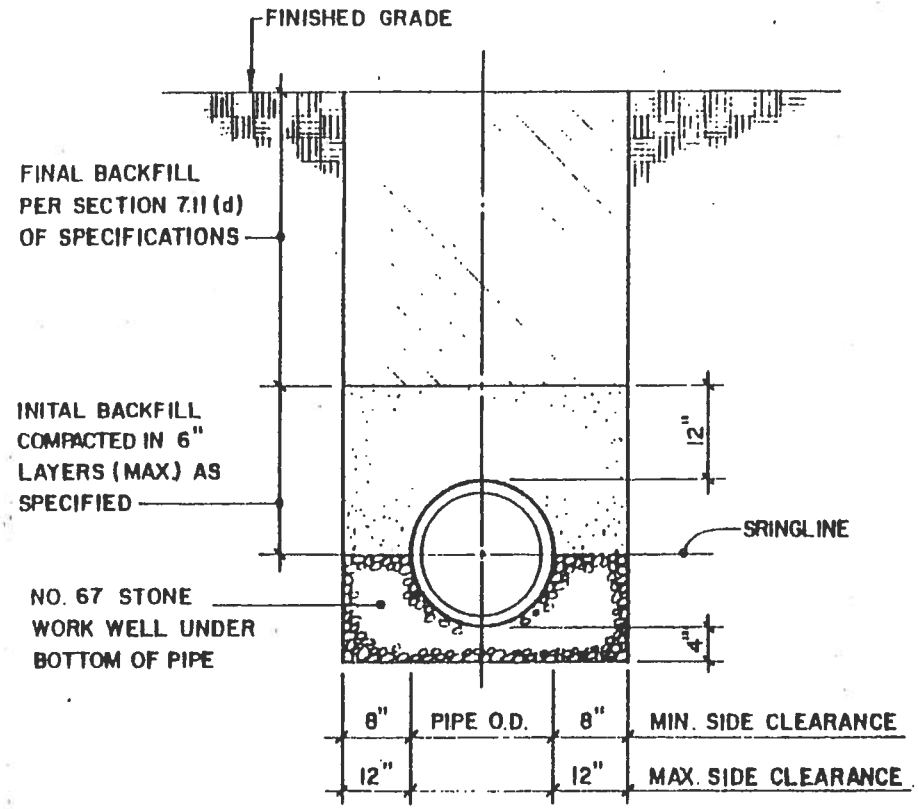

CLASS "B" BEDDING

REQUIRED FOR
PVC SEWER PIPE SDR-35 &
PVC RIBBED SEWER PIPE

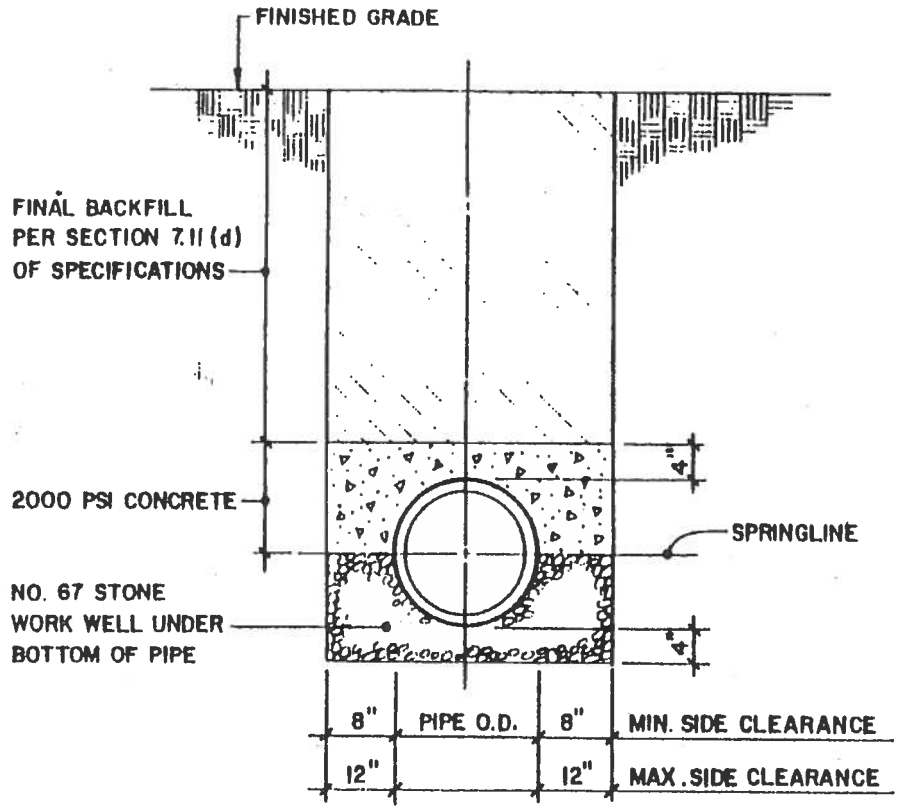

CLASS "A" BEDDING

REVISIONS	
DATE	DESCRIPTION
5/22/91	DELETE TRUSS PIPE

NOTE:
FOR TRENCHES REQUIRING SHORING & BRACING, DIMENSIONS SHALL BE TAKEN FROM THE INSIDE FACE OF THE SHORING & BRACING.

City of Oxford
STANDARDS

PIPE BEDDING & BACKFILLING / CLASS "B" & "A"

STD. NO.
6.02

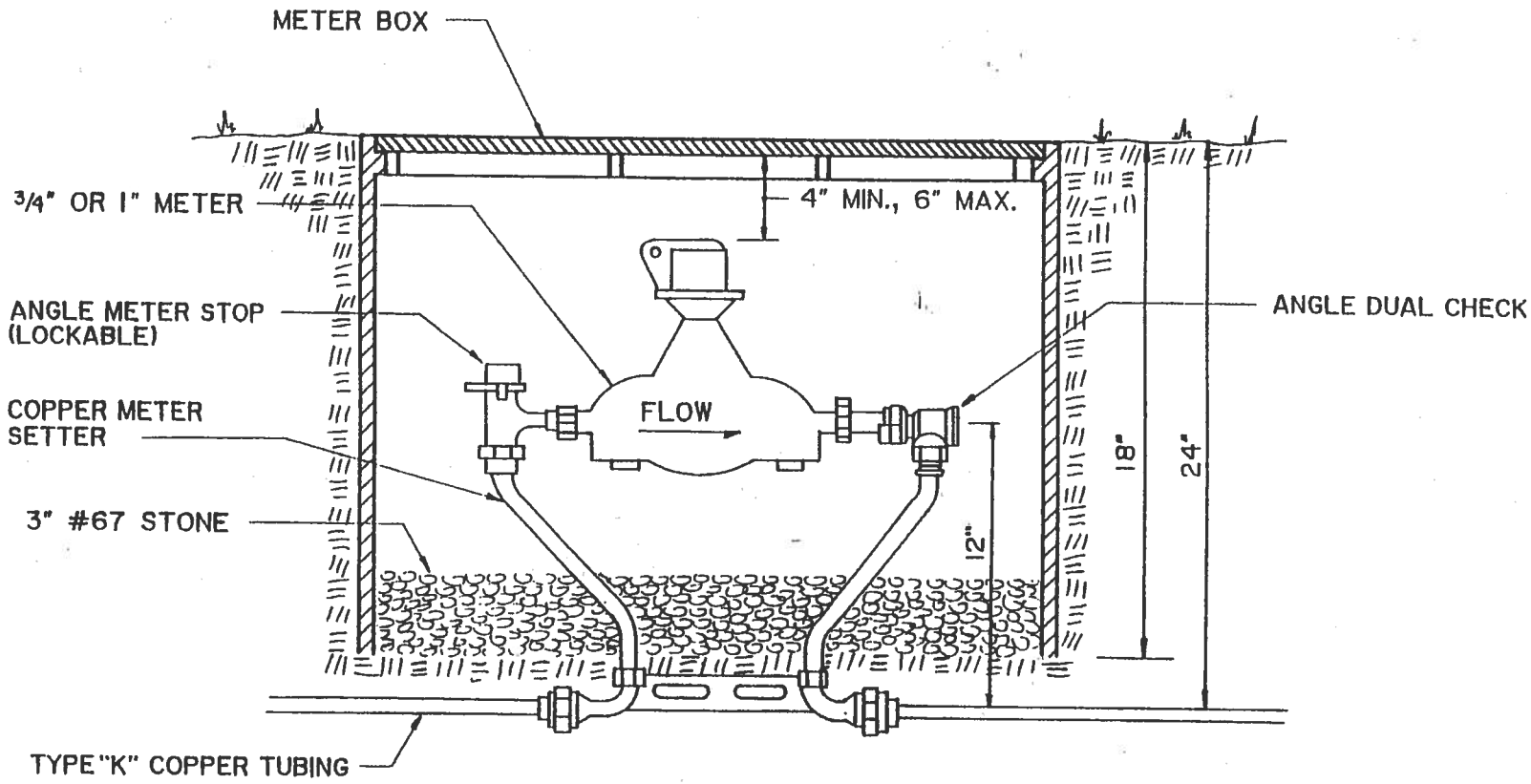

METER SETTER:

FORD VHH - 70 SERIES
MUELLER - 14000 SERIES

ANGLE DUAL CHECK:

FORD - STYLE HHA
MUELLER - #14244

REVISIONS	
DATE	DESCRIPTION

SHEET 1 OF 2

City of Oxford
STANDARDS

STANDARD 3/4" & 1" BACKFLOW / METER ASSEMBLY

STD. NO.
6.03

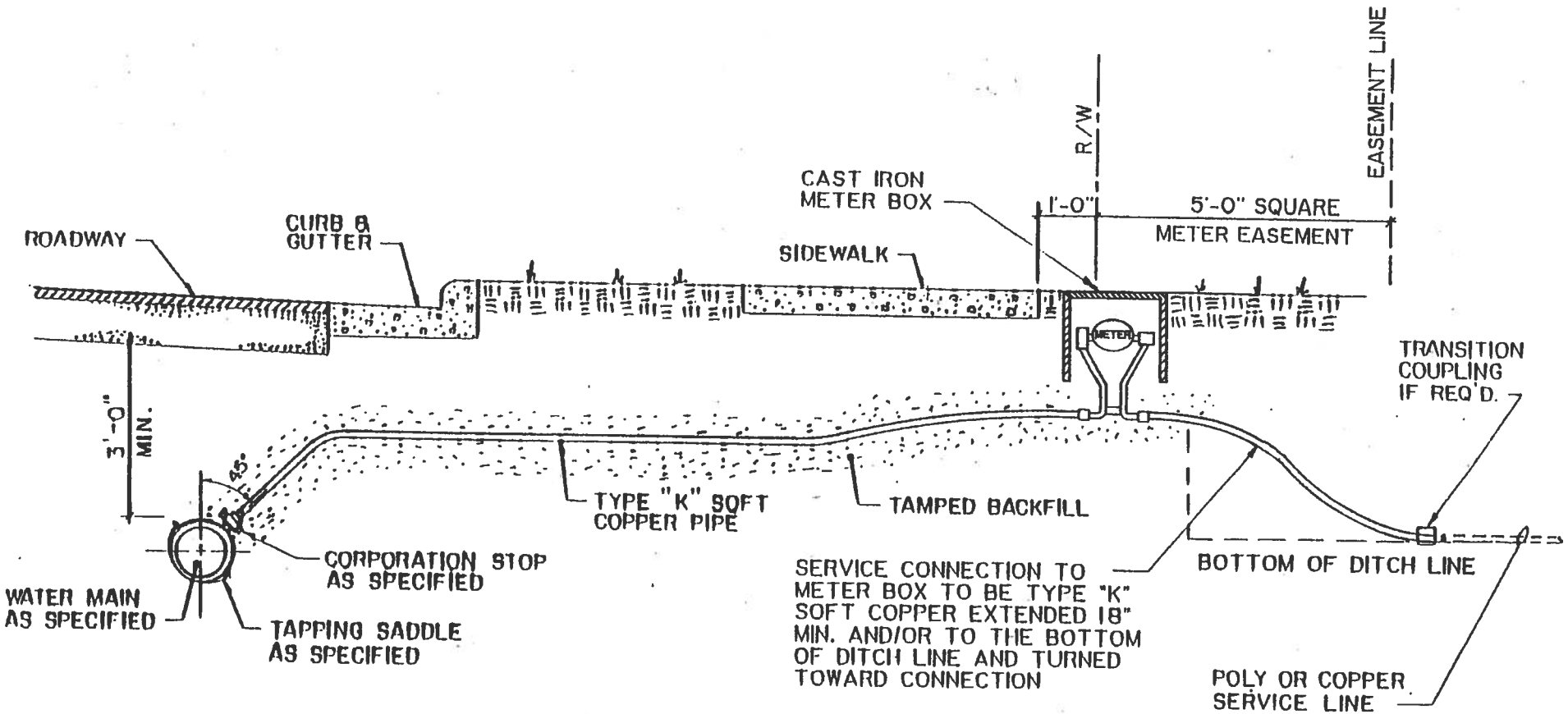

REVISIONS	
DATE	DESCRIPTION

SHEET 2 OF 2

City of Oxford
STANDARDS

STANDARD 3/4" AND 1" METER BOX INSTALLATION

STD. NO.
6.03

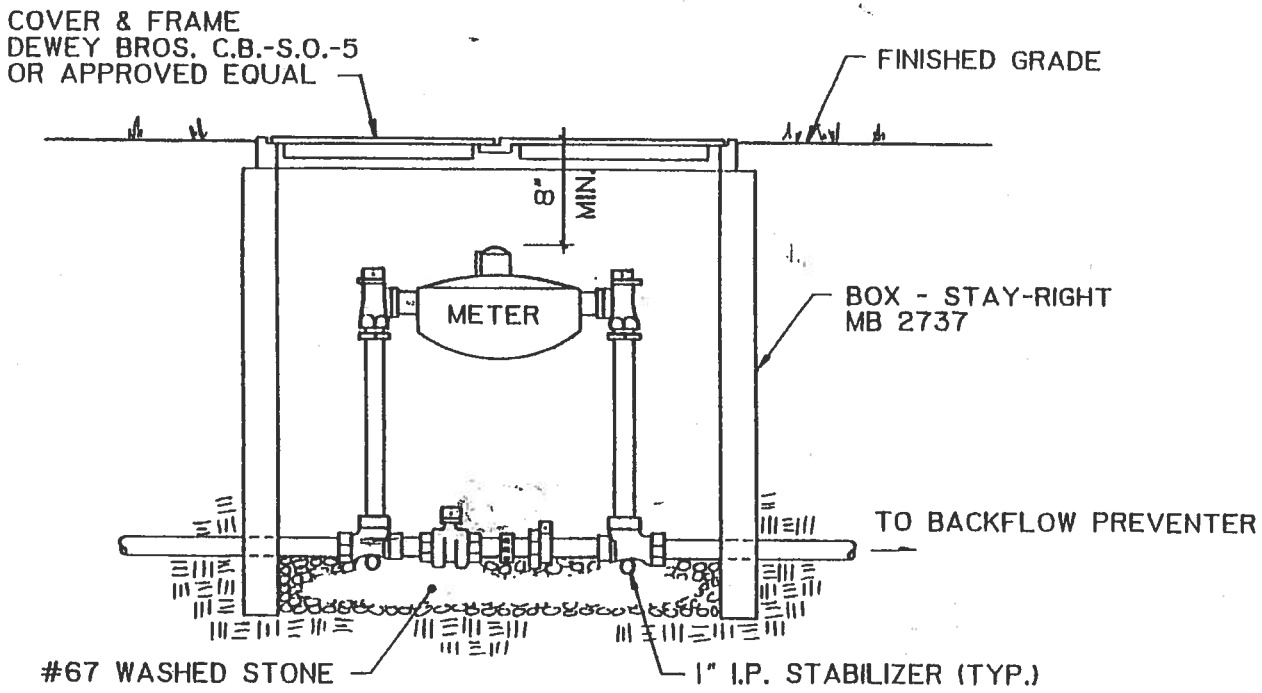

NOTE: METER YOKE - MUELLER OR FORD WITH LOCKABLE BY-PASS AND METER STOPS

REVISIONS	
DATE	DESCRIPTION

City of Oxford STANDARDS

1 1/2" & 2" METER INSTALLATION & VAULT

STD. NO. 6.04

GENERAL NOTES :

METER AND BY-PASS ASSEMBLY TO BE DUCTILE IRON FLANGED TYPE.

METER FACE TO BE A MAXIMUM OF 2' BELOW FINISHED GRADE.

ADJUSTABLE CONNECTING PIECE TO BE CLOW F-1439 ADJUSTABLE CONNECTOR

ACCESS DOOR TO BE BILCO KD-3

VALVES SHALL BE IRON BODY TYPE.

EITHER SOLID BRICK, SOLID BLOCK OR PRECAST CONCRETE MAY BE USED.

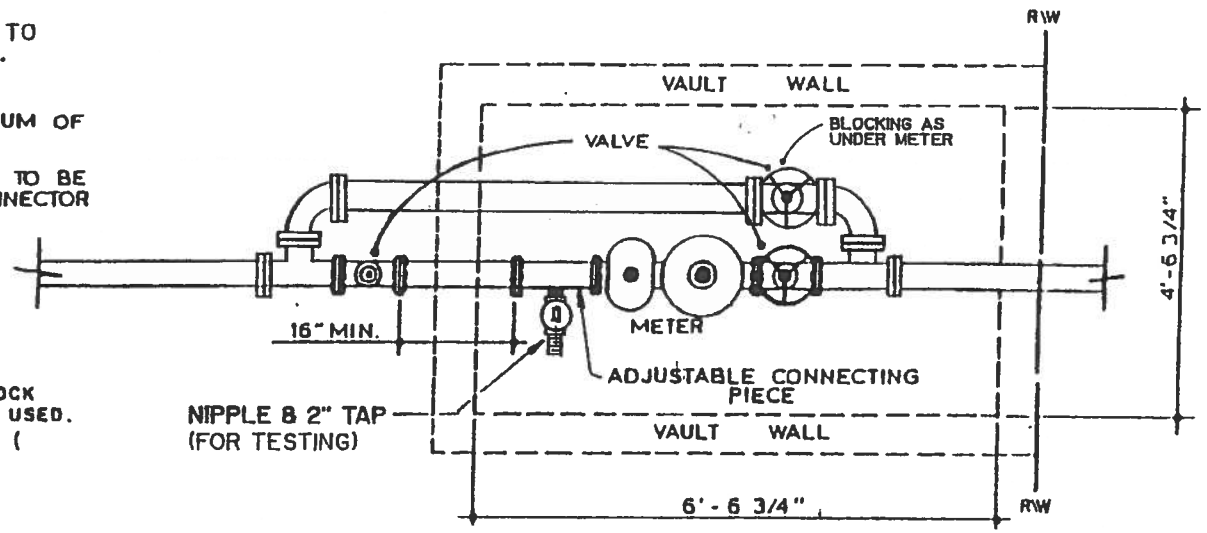

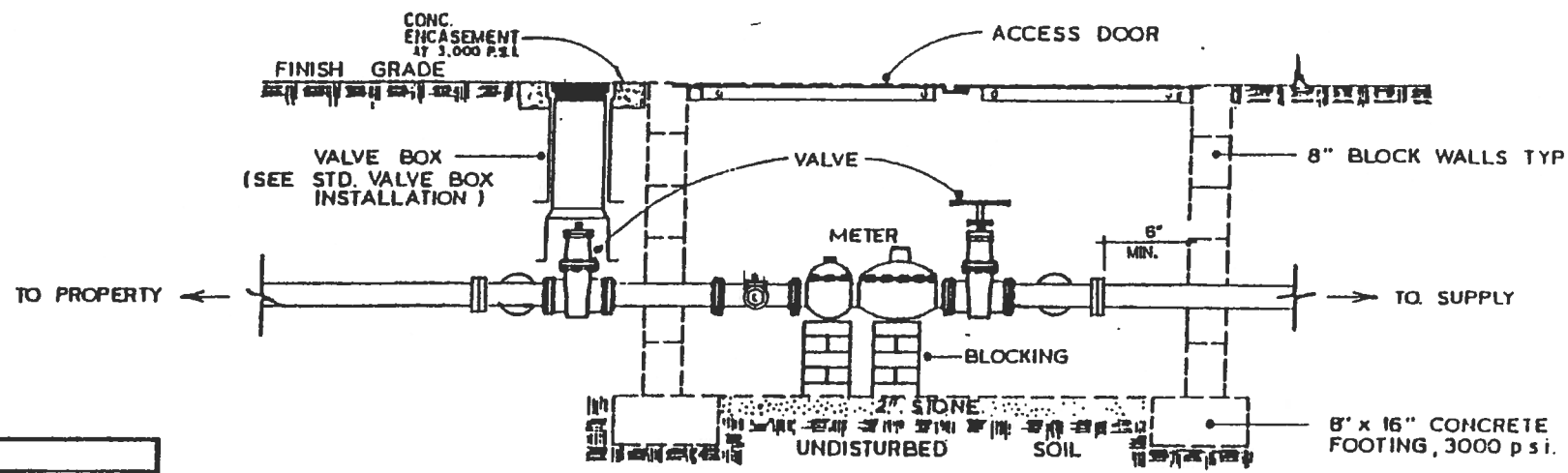

REVISIONS	
DATE	DESCRIPTION
5/22/91	ADD NIPPLE & 2" TAP

City of Oxford STANDARDS

STANDARD 3" & 4" METER INSTALLATION & VAULT

STD. NO. 6.05

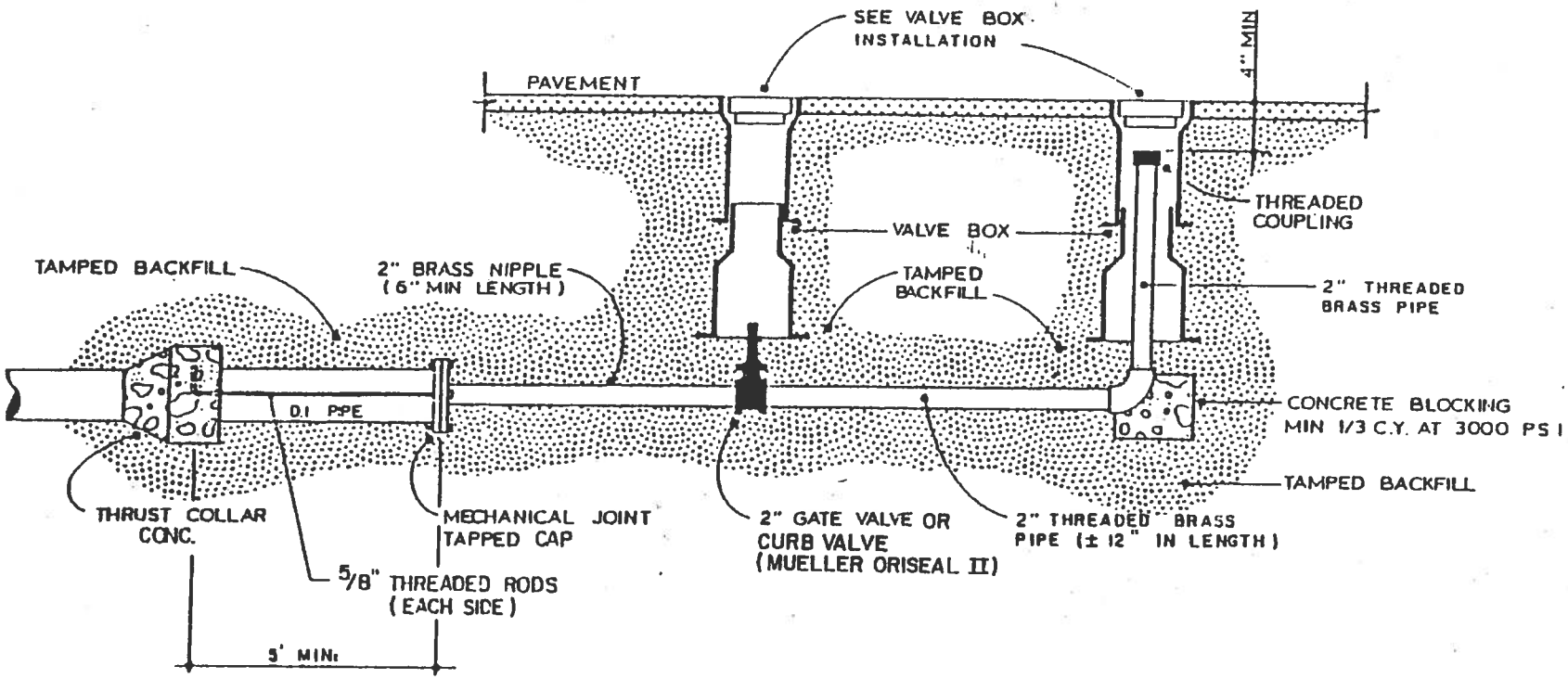

REVISIONS	
DATE	DESCRIPTION

City of Oxford STANDARDS

STANDARD 2" BLOW-OFF ASSEMBLY

STD. NO. 6.06

PAINT HYDRANT ONE COAT AFTER INSTALLATION. PAINT BARREL RED, CAPS AND BONNET SILVER.

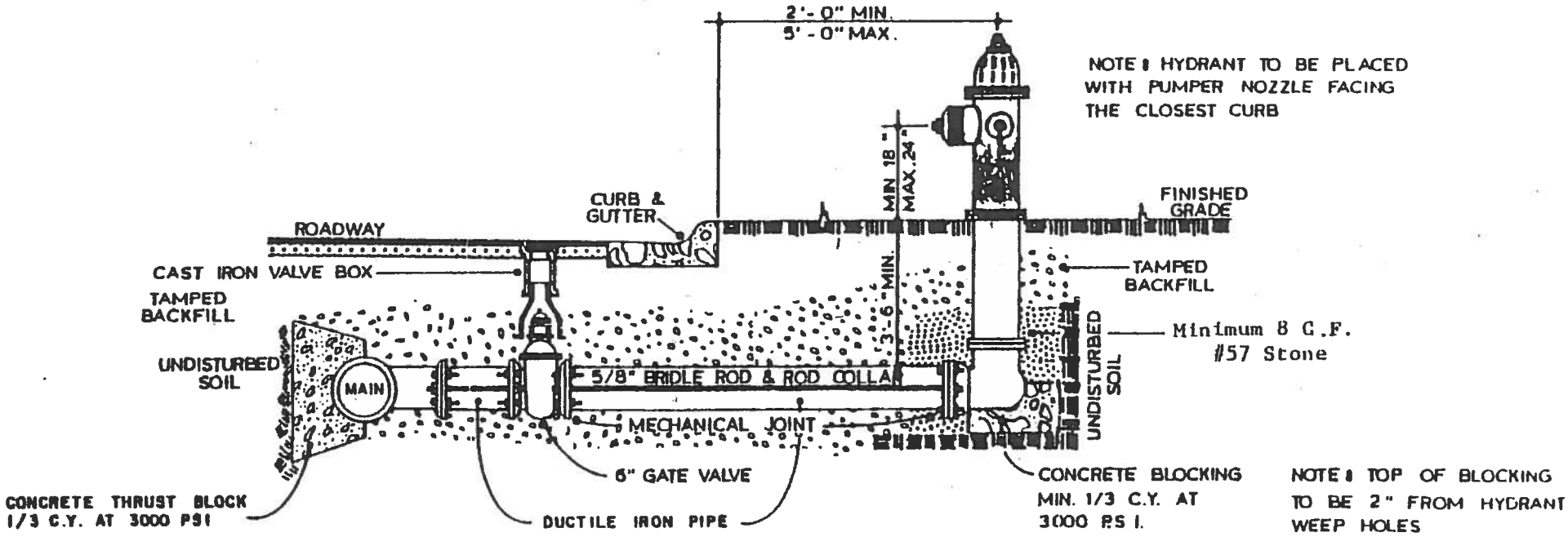

REVISIONS	
DATE	DESCRIPTION

City of Oxford
STANDARDS

STANDARD HYDRANT INSTALLATION

STD. NO.
6.07

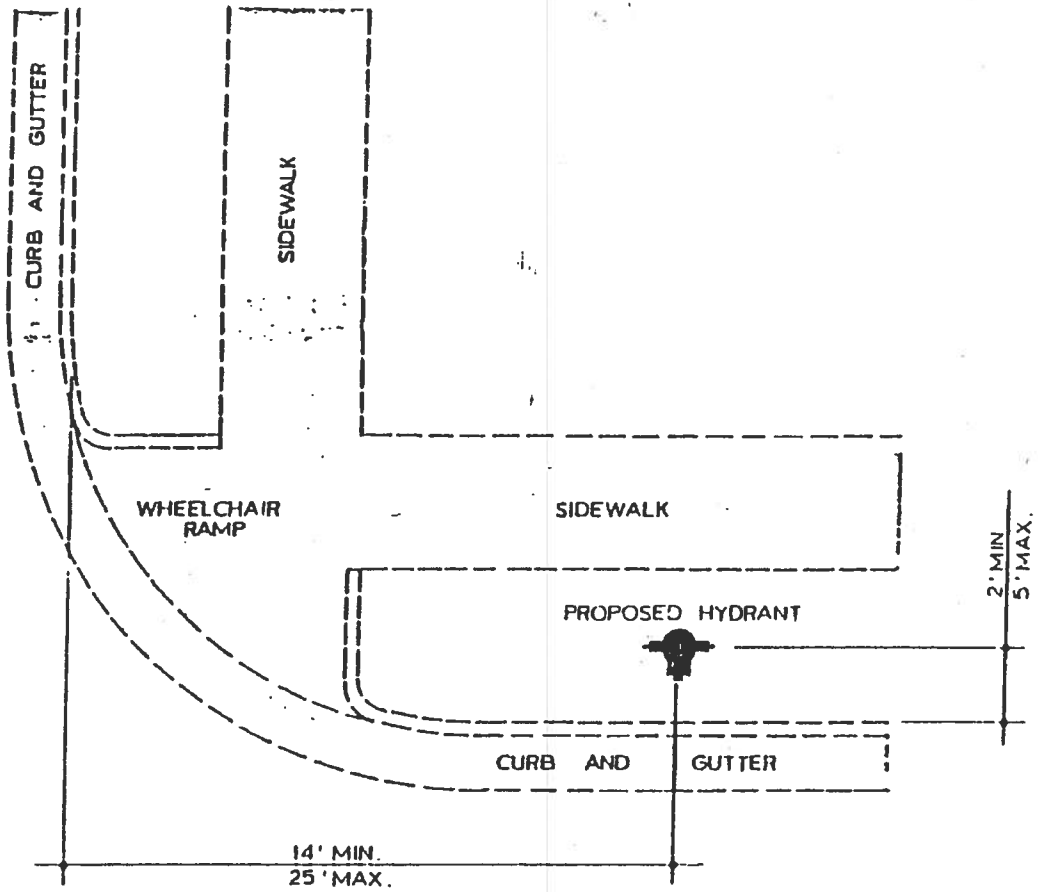

REVISIONS	
DATE	DESCRIPTION

City of Oxford
STANDARDS

STANDARD HYDRANT LOCATION

STD. NO.
6.08

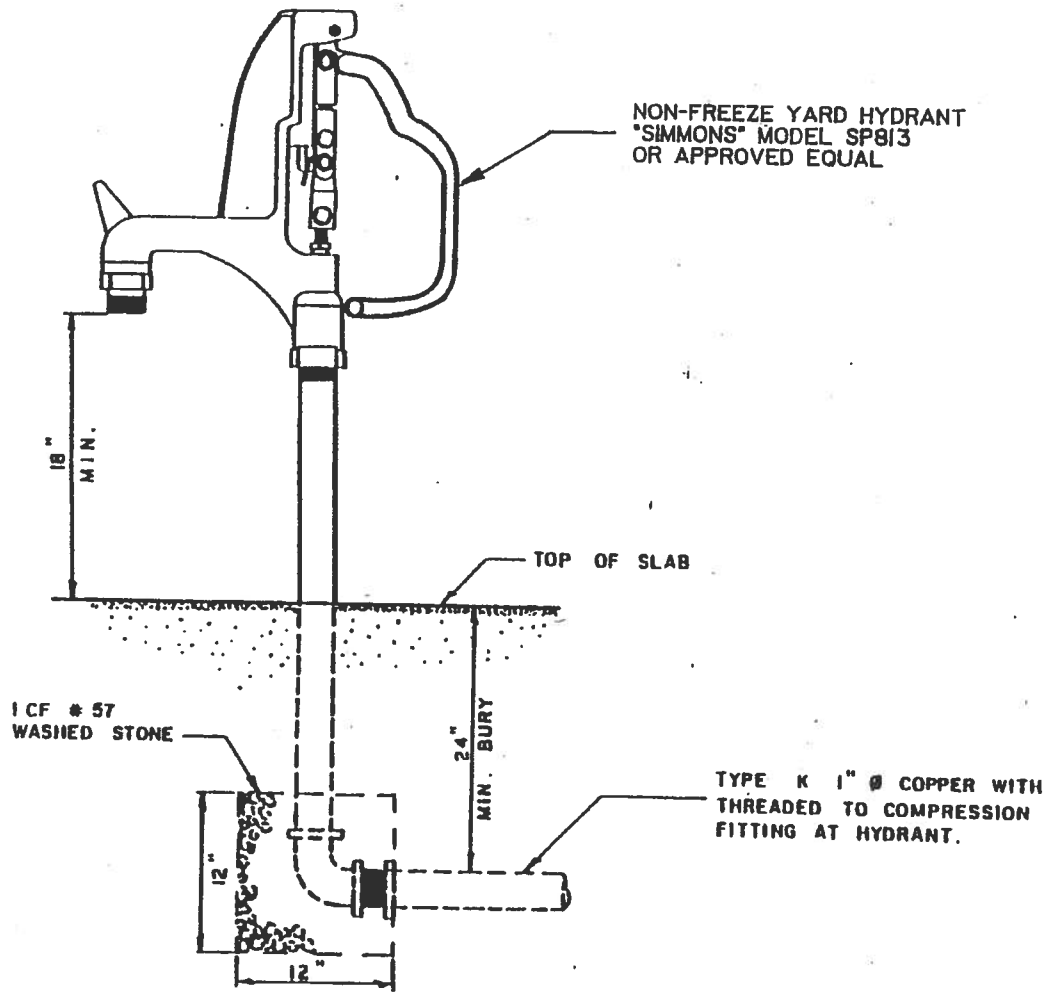

REVISIONS	
DATE	DESCRIPTION
6/93	NEW DETAIL

City of Oxford
STANDARDS

YARD HYDRANT (non-freeze)

STD. NO.
6.09

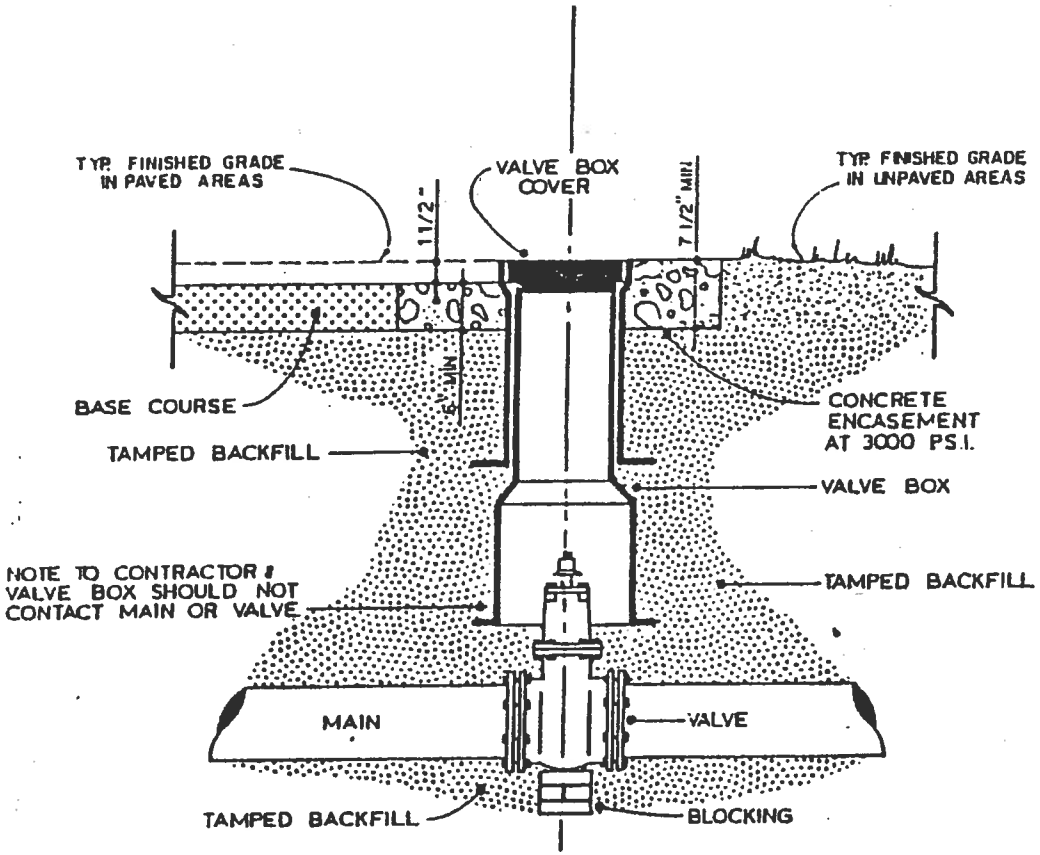

SECTION

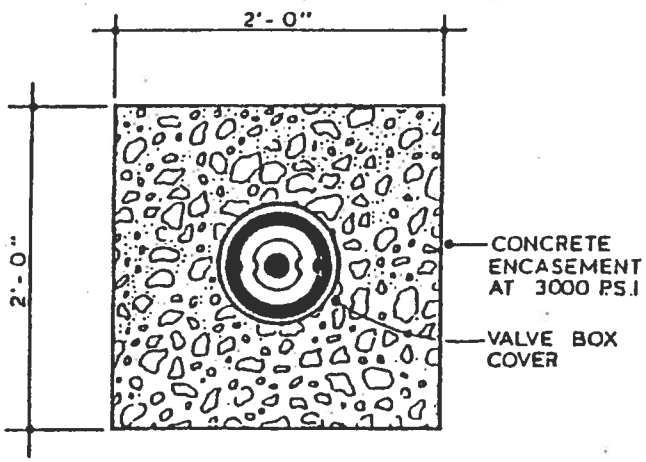

PLAN

REVISIONS	
DATE	DESCRIPTION
6/93	REV. DETAIL No.

City of Oxford
STANDARDS

STANDARD VALVE BOX INSTALLATION

STD. NO.
6.10

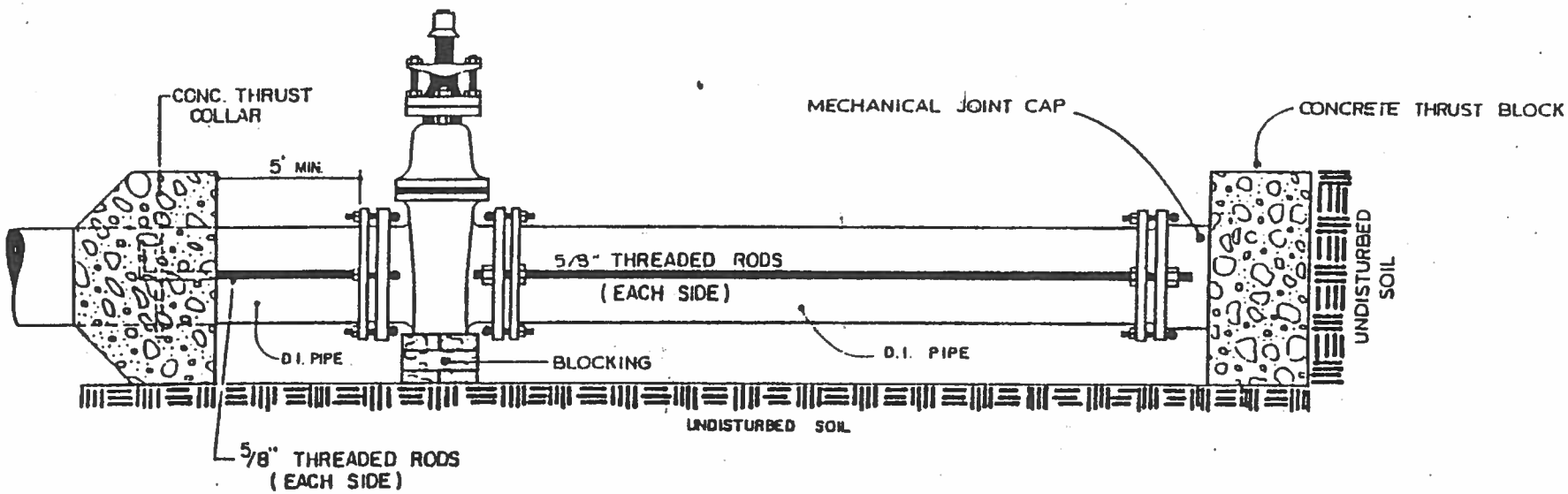

REVISIONS	
DATE	DESCRIPTION
6/93	REV. DETAIL No.

City of Oxford STANDARDS

STANDARD CAPPING DETAIL

STD. NO. 6.11

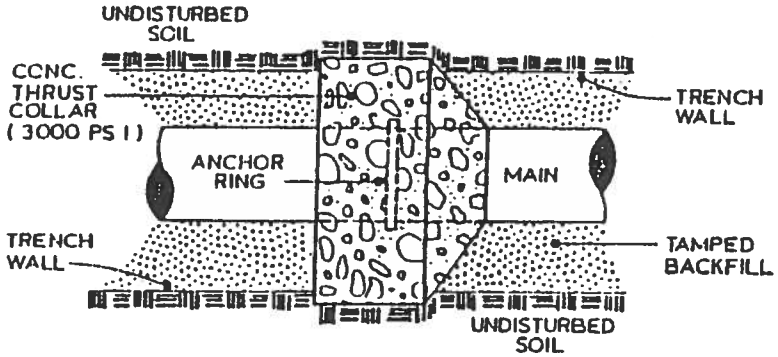

PLAN

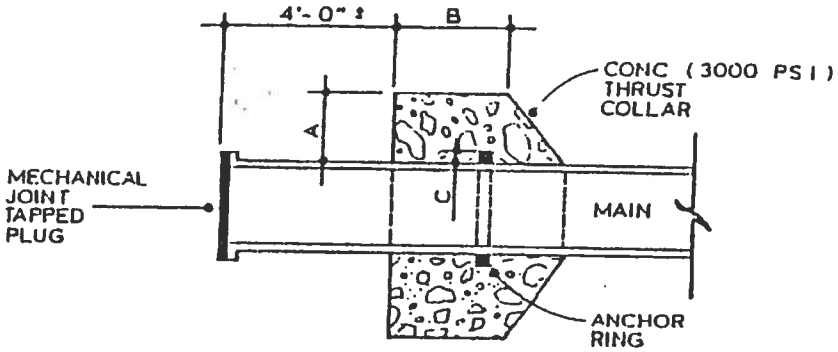

SECTION

SCHEDULE				
PIPE DIAMETER	CONCRETE THRUST COLLAR		ANCHOR RING	RINGS REQUIRED
	A	B	C	
6", 8", 12"	1'-0"	1'-0"	2"	ONE
16"	1'-4"	1'-0"	2"	ONE
20"	1'-4"	1'-0"	3"	ONE
24"	1'-4"	1'-0"	3"	TWO
30"	1'-4"	1'-2"	4"	TWO
36"	1'-4"	1'-4"	4"	TWO

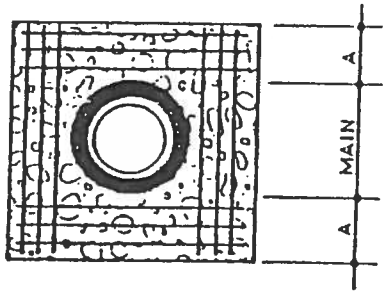

REINFORCING

NOTE:
6" TO 16" MAINS = 12-NO 7 BARS
20" TO 36" MAINS = 12-NO. 8 BARS
BARS PLACED AS SHOWN

REVISIONS	
DATE	DESCRIPTION
6/93	REV. DETAIL No.

City of Oxford STANDARDS

STANDARD THRUST COLLAR INSTALLATION

STD. NO. 6.12

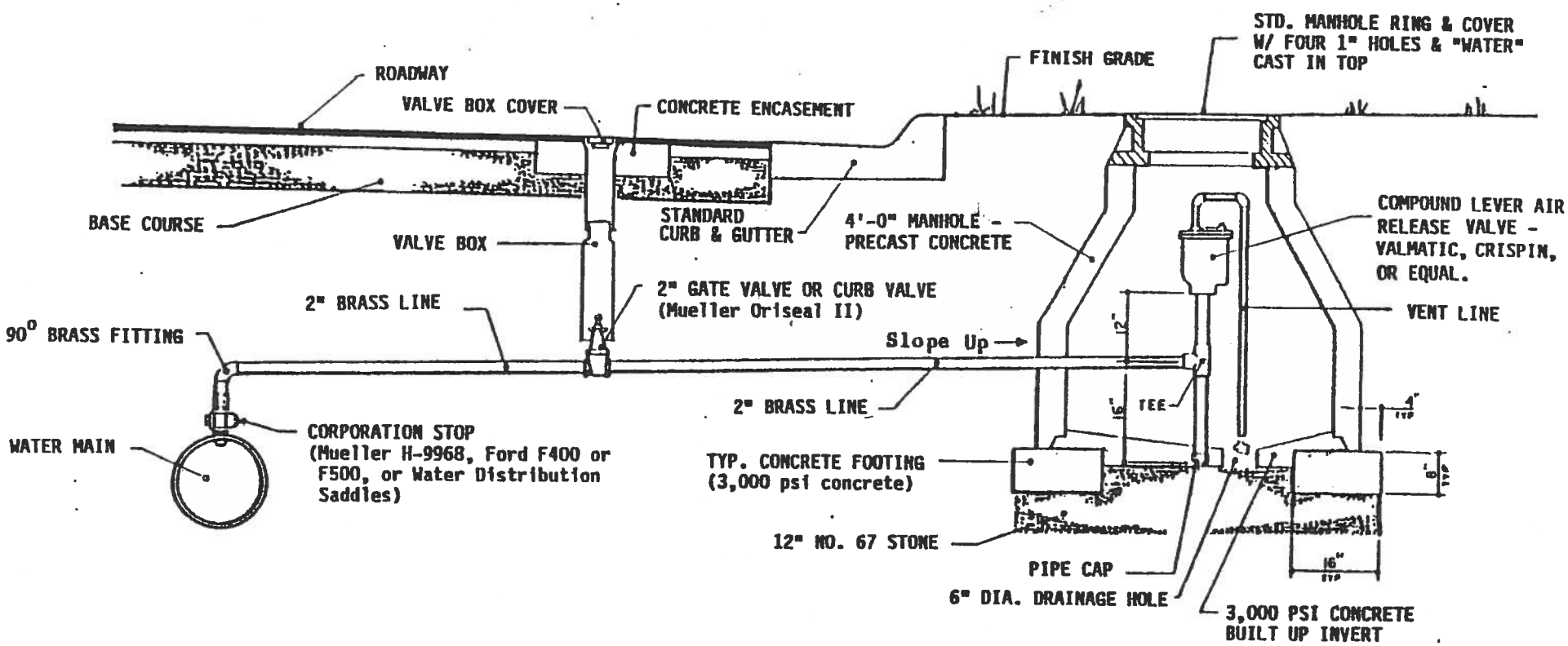

NOTES: (1) CORPORATION STOP SHALL BE LOCATED IN THE TOP OF THE WATER MAIN.

(2) ALL PIPING AND FITTINGS IN THE MANHOLE SHALL BE GALVANIZED IRON.

(3) MANHOLE STEPS SHALL BE PLACED 16" O.C. WHEN DEPTH OF MANHOLE EXCEEDS 5 FEET.

REVISIONS	
DATE	DESCRIPTION
6/93	REV. DETAIL No.

City of Oxford STANDARDS

STANDARD AIR RELEASE MANHOLE
FOR WATER MAINS

STD.NO. 6.13

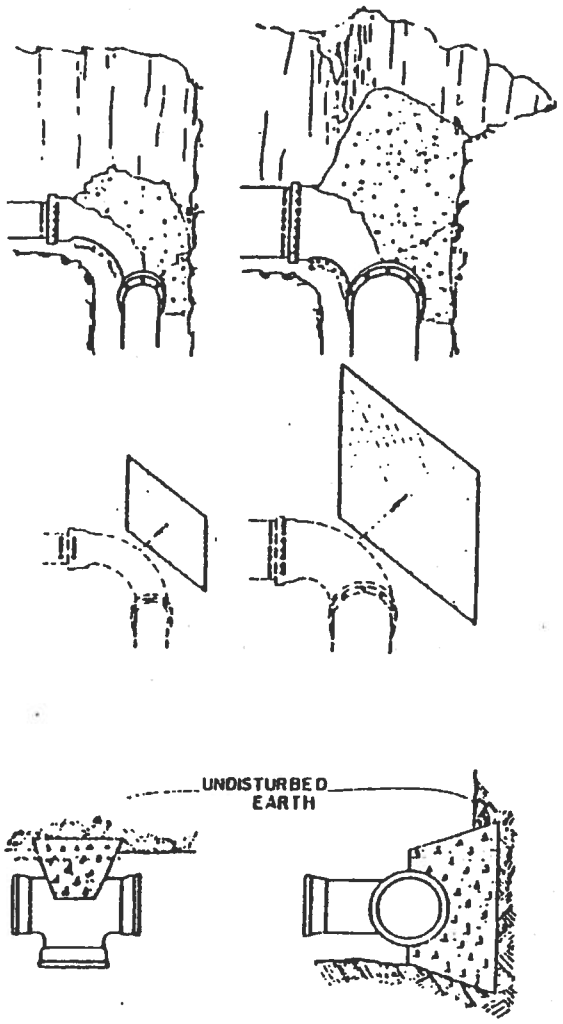

MINIMUM CONCRETE BLOCKING (C.Y.)*					
NOM. PIPE DIA. IN.	TEES & DEAD ENDS	90° BEND	45° BEND	22½° BEND	11¼° BEND
4	0.1	0.1	0.1	0.1	0.1
6	0.2	0.2	0.1	0.1	0.1
8	0.2	0.3	0.2	0.1	0.1
10	0.3	0.5	0.3	0.2	0.2
12	0.4	0.6	0.5	0.3	0.3
14	0.7	0.9	0.6	0.5	0.5
16	0.7	0.9	0.6	0.5	0.5
18	0.9	1.2	0.7	0.6	0.6
20	1.1	1.6	1.1	0.7	0.7
24	1.7	2.3	1.6	0.9	0.9

* CONCRETE SHALL BE 3000 P.S.I. MIX.

Note: Wrap fittings in 6 mil plastic before pouring concrete

REVISIONS	
DATE	DESCRIPTION
6/93	REV. DETAIL No.

City of Oxford
STANDARDS

STANDARD REACTION BLOCKING

STD. NO.
6.14

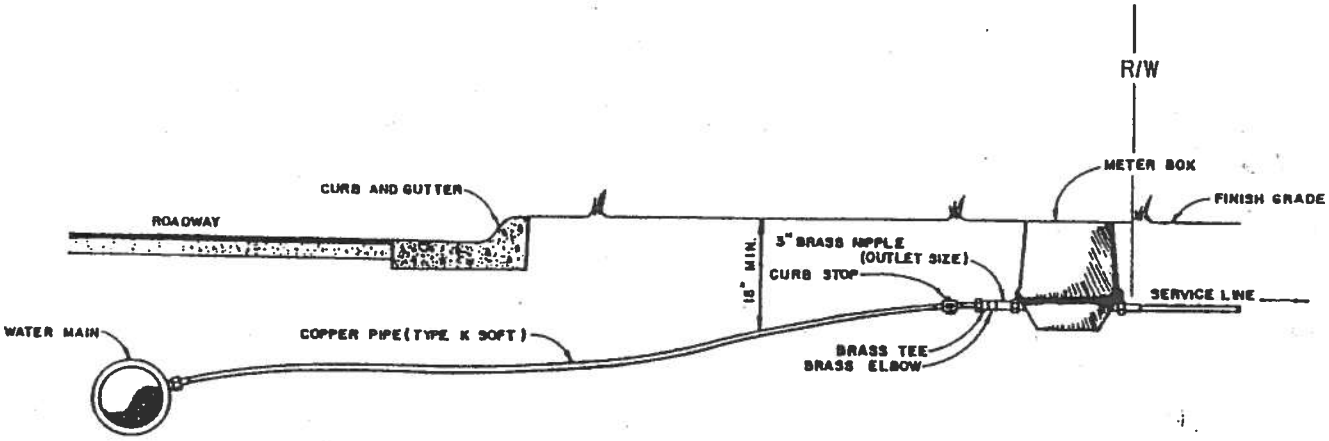

ELEVATION VIEW

APPROVED MULTIPLE CONNECTIONS

SIZE SERVICE INCHES	SIZE INLET INCHES	NUMBER OF BRANCHES
3/4	1	2
3/4	1	3
3/4	1 1/4	4
3/4	1 1/2	5-8

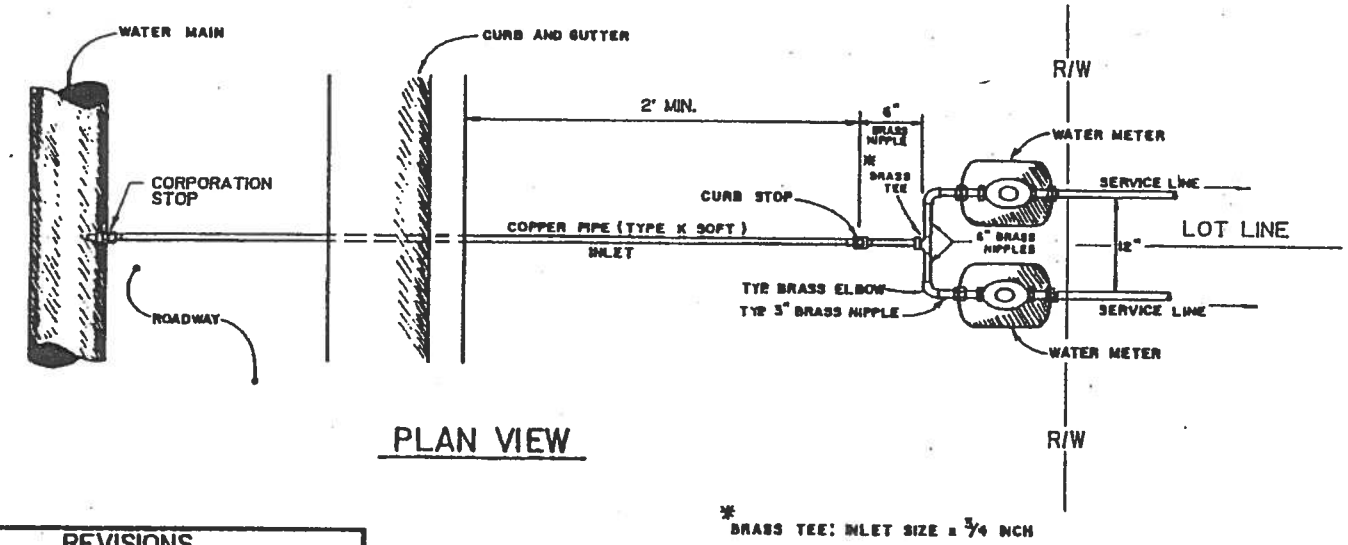

PLAN VIEW

* BRASS TEE: INLET SIZE x 3/4 INCH

THERE SHALL BE NO MULTIPLE CONNECTIONS FOR SERVICES OTHER THAN 3/4" (INCHES)

CURB STOPS SHALL BE AS MANUFACTURED BY FORD

METER BOXES SHALL BE AS DESCRIBED IN THE STANDARD SPECIFICATIONS UNDER WATER DISTRIBUTION; HOWEVER, THE INLET SHALL BE IRON PIPE THREAD INLETS.

CURB STOP SHALL BE CENTERED ON MULTIPLE BRANCH SERVICE.

(FOR MULTI-FAMILY PROJECTS ONLY)

REVISIONS	
DATE	DESCRIPTION
6/93	REV. DETAIL No.

City of Oxford
STANDARDS

STANDARD MULTIPLE BRANCH SERVICES

STD. NO.
6.15

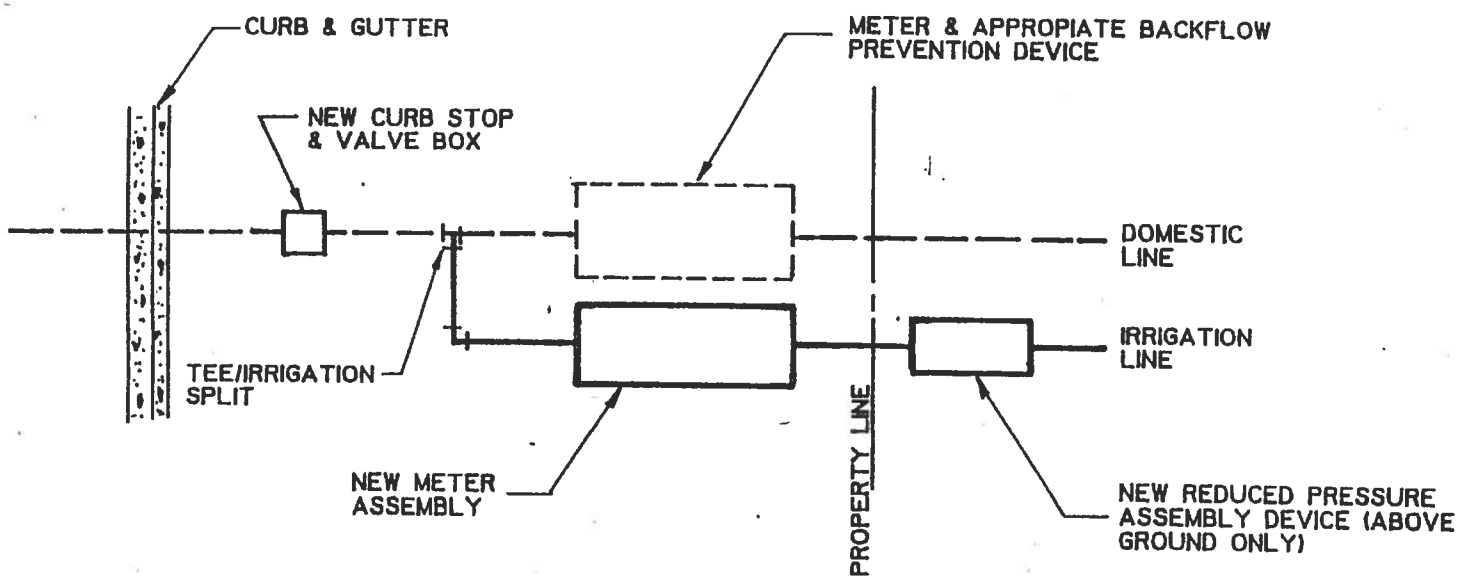

REVISIONS	
DATE	DESCRIPTION
6/93	NEW DETAIL

City of Oxford
STANDARDS

IRRIGATION TAP ON EXISTING SERVICE

STD. NO.
6.16

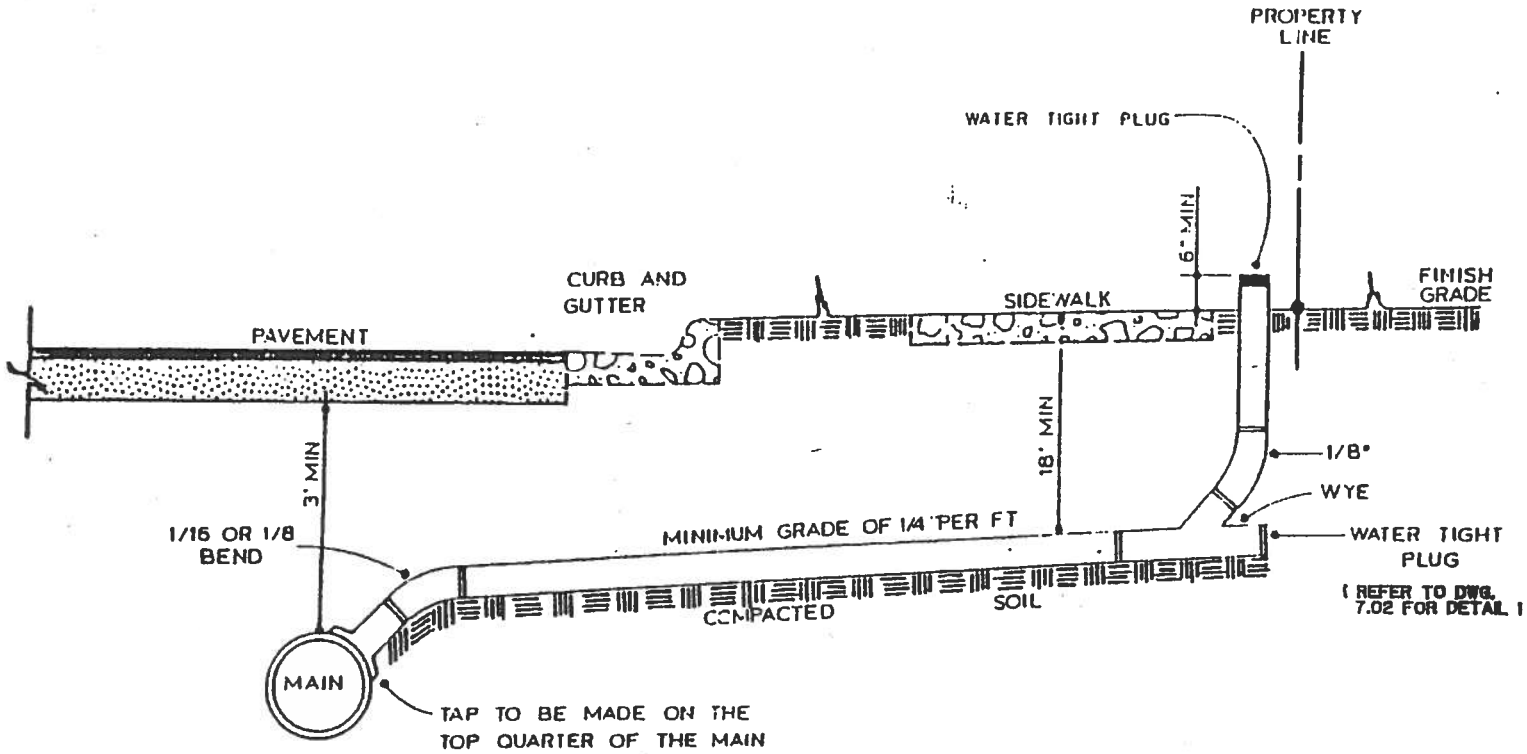

REVISIONS	
DATE	DESCRIPTION

City of Oxford
STANDARDS

STANDARD SANITARY SEWER TAP AND SERVICE

STD. NO.
7.01

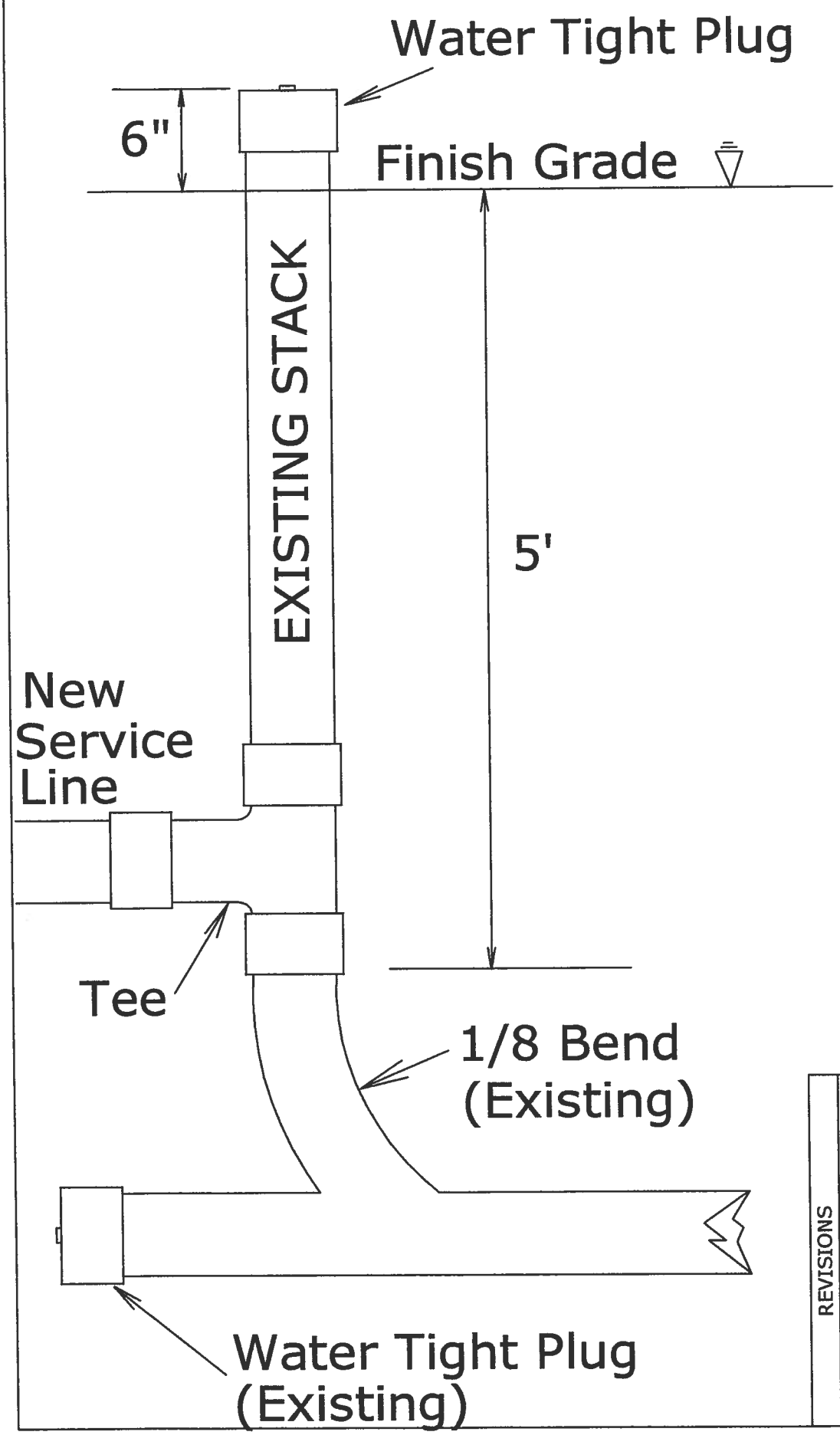

STD. NO. 7.01A

STANDARD SANITARY SEWER SERVICE
CONNECTION TO AN EXISTING STACK

REVISIONS		
	APPROVED BY	
DATE	LPT	
2/21/06		

City of Oxford
Standards

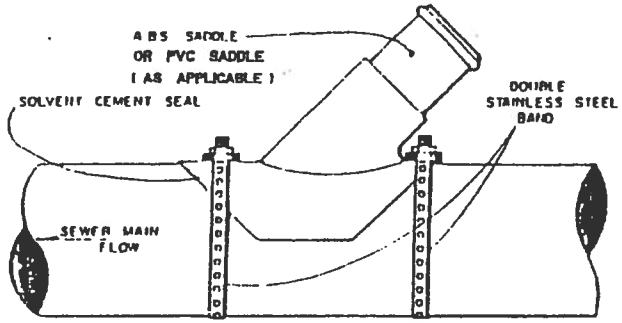

TRUSS PIPE
OR
PVC PIPE

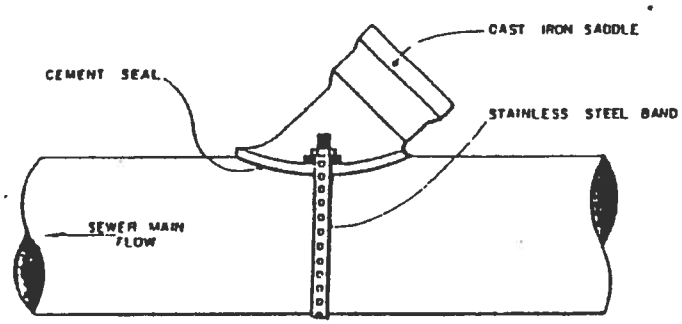

VITRIFIED CLAY PIPE
OR DUCTILE IRON PIPE

NOTE : V.C.P. SADDLE SHALL BE BLOCKED AND SEALED WITH CONCRETE.

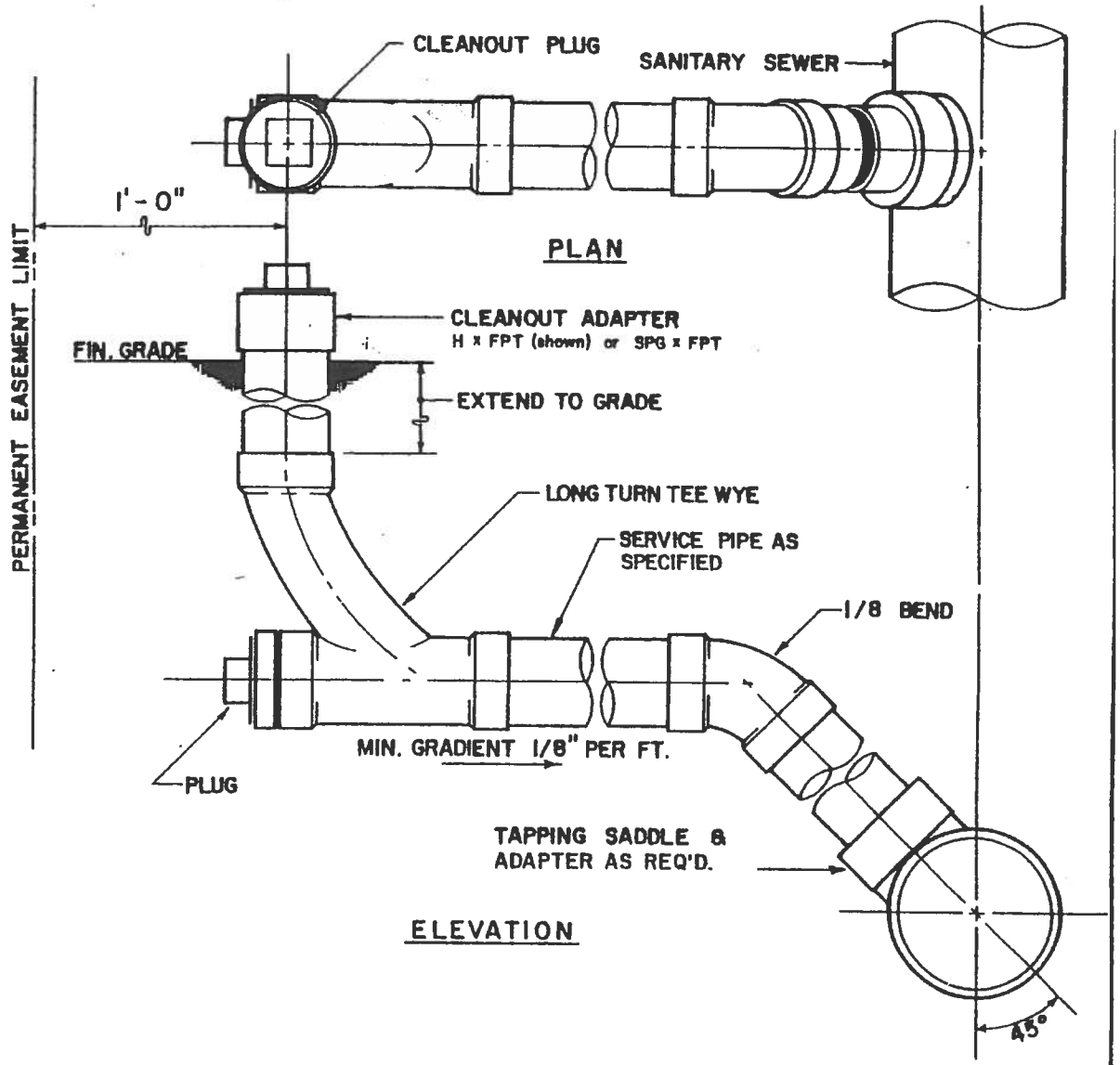

REVISIONS	
DATE	DESCRIPTION

City of Oxford
STANDARDS

SANITARY SEWER SERVICE CONNECTIONS

STD. NO.
7.02

NOTE: FOR DEAD-END MANHOLES THE INVERT TROUGH CONSTRUCTION SHALL BE EXTENDED THROUGH THE MANHOLE.

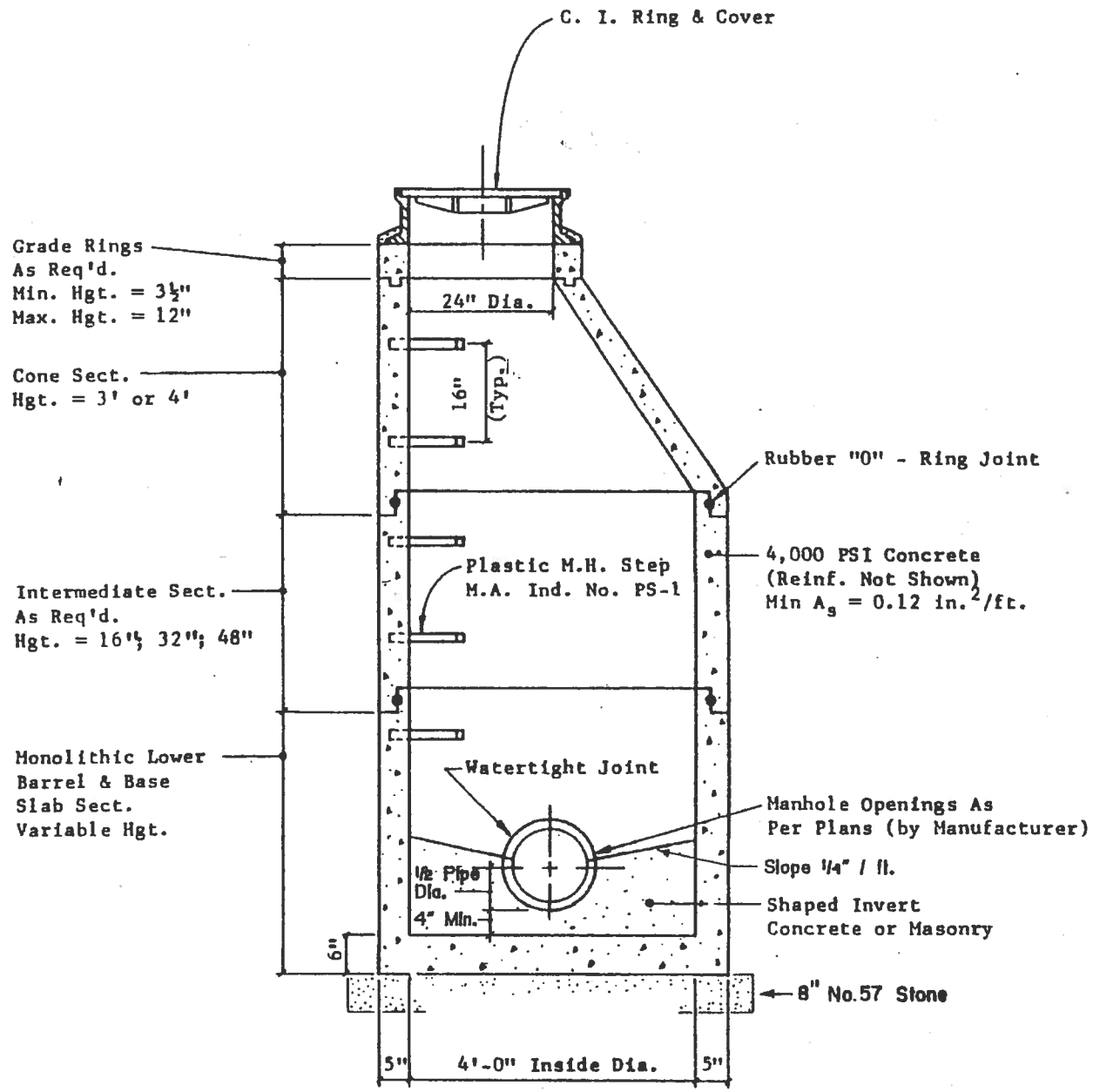

REVISIONS	
DATE	DESCRIPTION

City of Oxford
STANDARDS

4' DIAMETER PRECAST MANHOLE

STD. NO.
7.03

NOTE : FOR DEAD-END MANHOLES THE INVERT TROUGH CONSTRUCTION SHALL BE EXTENDED THROUGH THE MANHOLE.

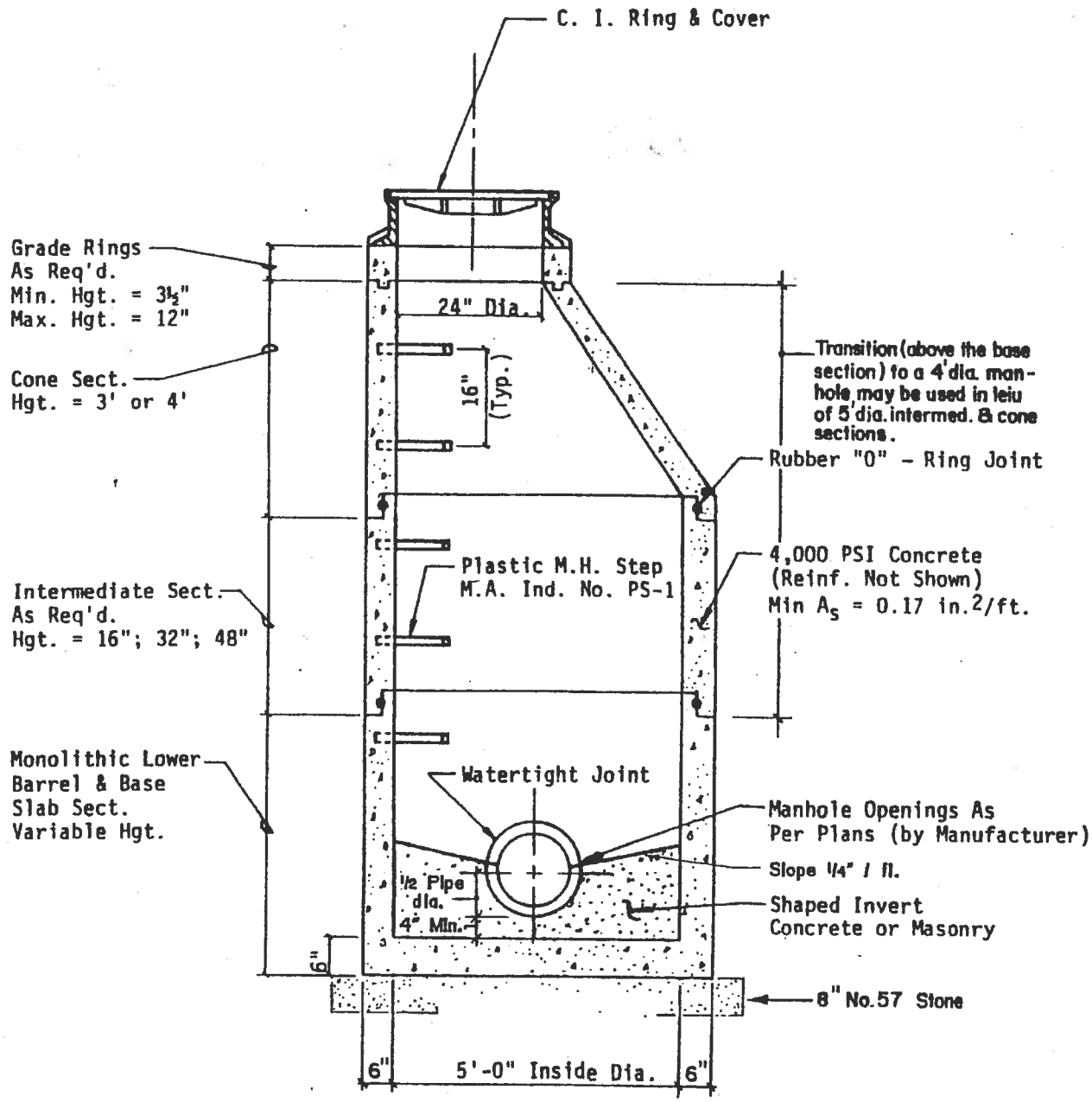

REVISIONS	
DATE	DESCRIPTION

City of Oxford
STANDARDS

5' DIAMETER PRECAST MANHOLE

STD. NO.
7.04

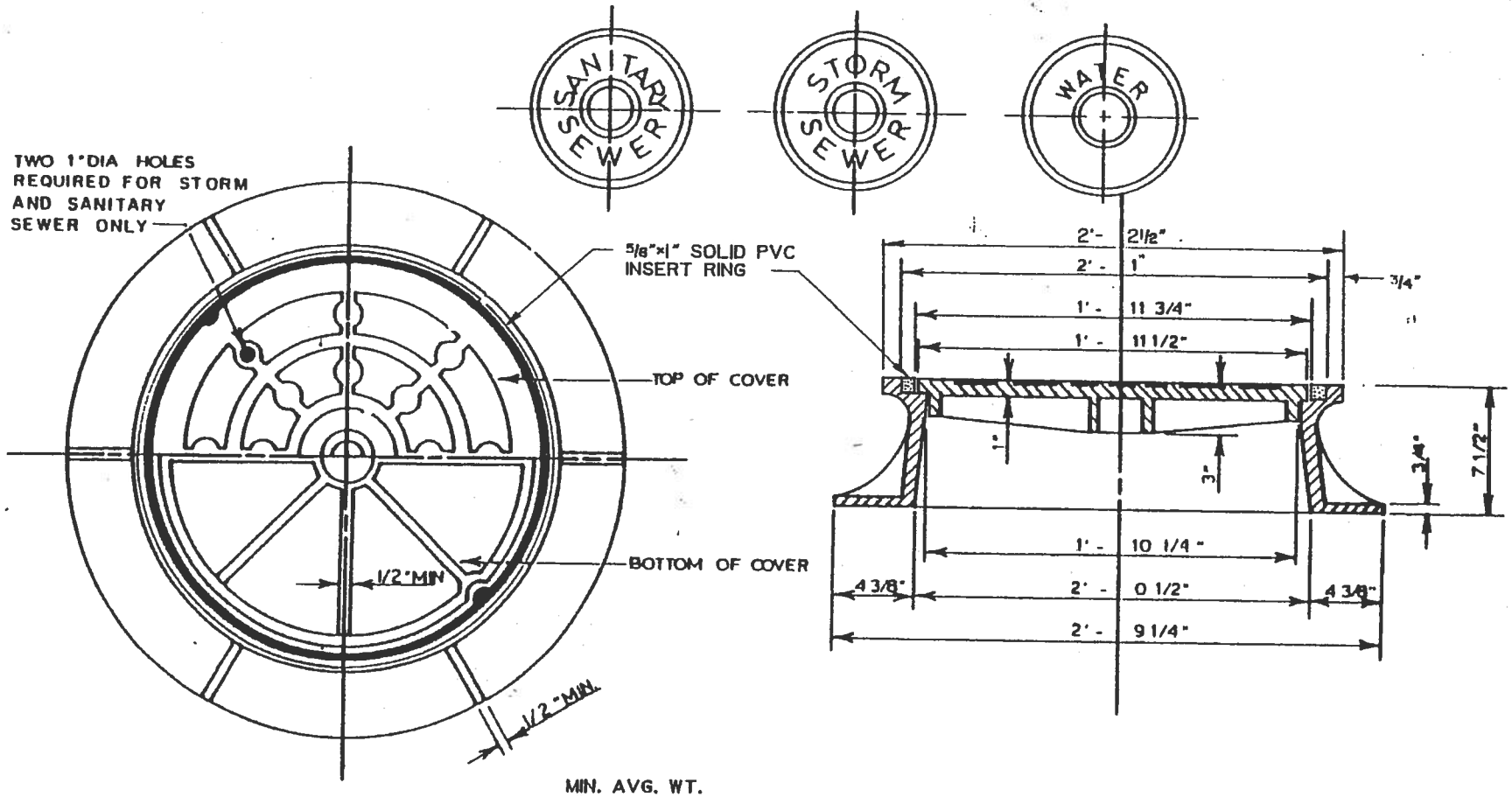

MIN. AVG. WT.	
RING	190 lbs.
COVER	120 lbs.
TOTAL	310 lbs.

MANHOLE RING AND COVER SHALL BE DEWEY BROS. MH-RCR-2001-EC

REVISIONS	
DATE	DESCRIPTION

City of Oxford STANDARDS

STANDARD MANHOLE RING & COVER

FOR MANHOLES IN PAVED AREAS

SHEET 1 OF 3

STD. NO. 7.05

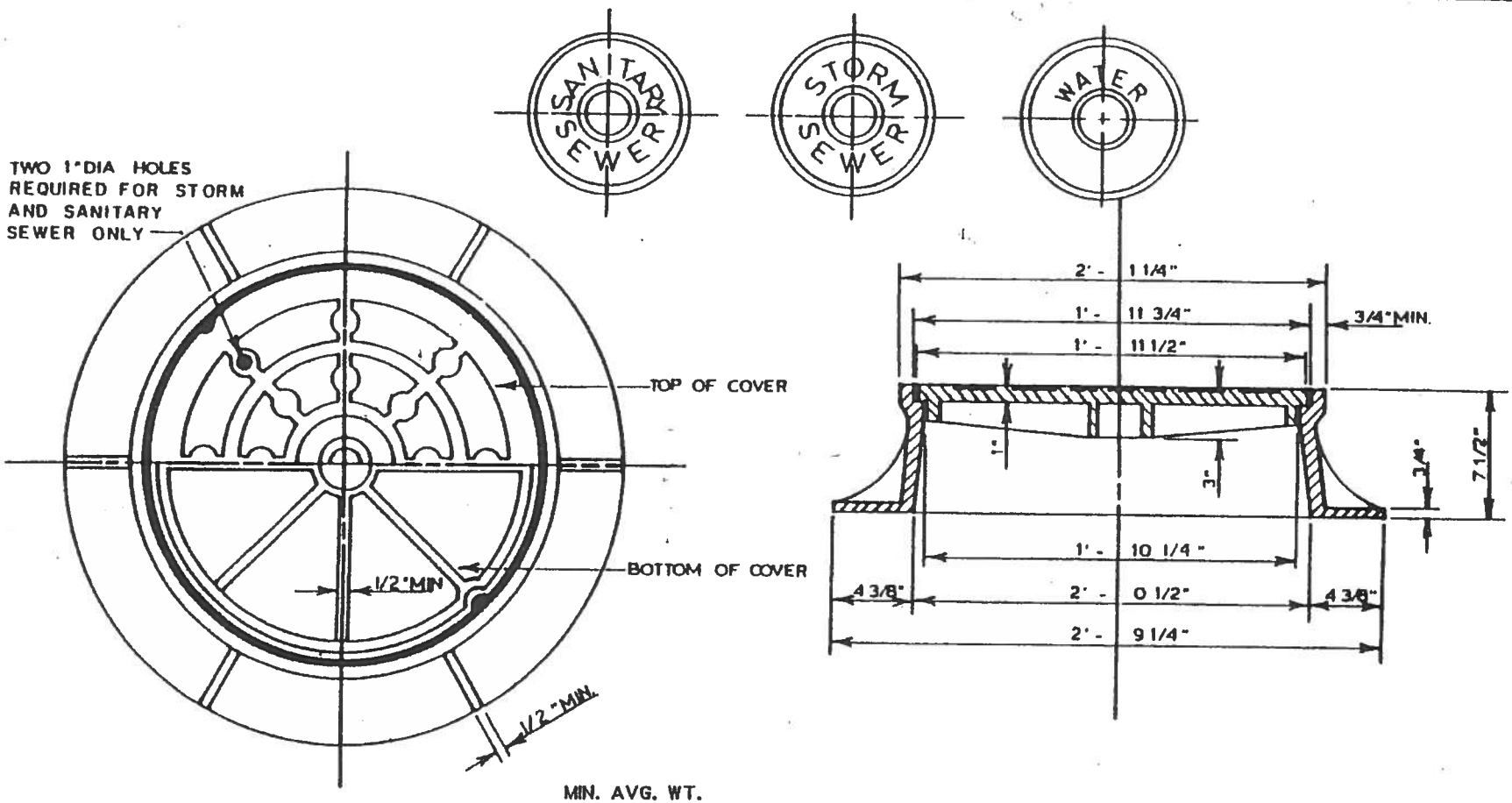

MIN. AVG. WT.	
RING	190 lbs.
COVER	120 lbs.
TOTAL	310 lbs.

MANHOLE RING AND COVER SHALL BE DEWEY BROS. MH-RCR-2001

REVISIONS	
DATE	DESCRIPTION

SHEET 2 OF 3

City of Oxford STANDARDS

STANDARD MANHOLE RING & COVER

FOR MANHOLES IN UNPAVED AREAS

STD. NO. 7.05

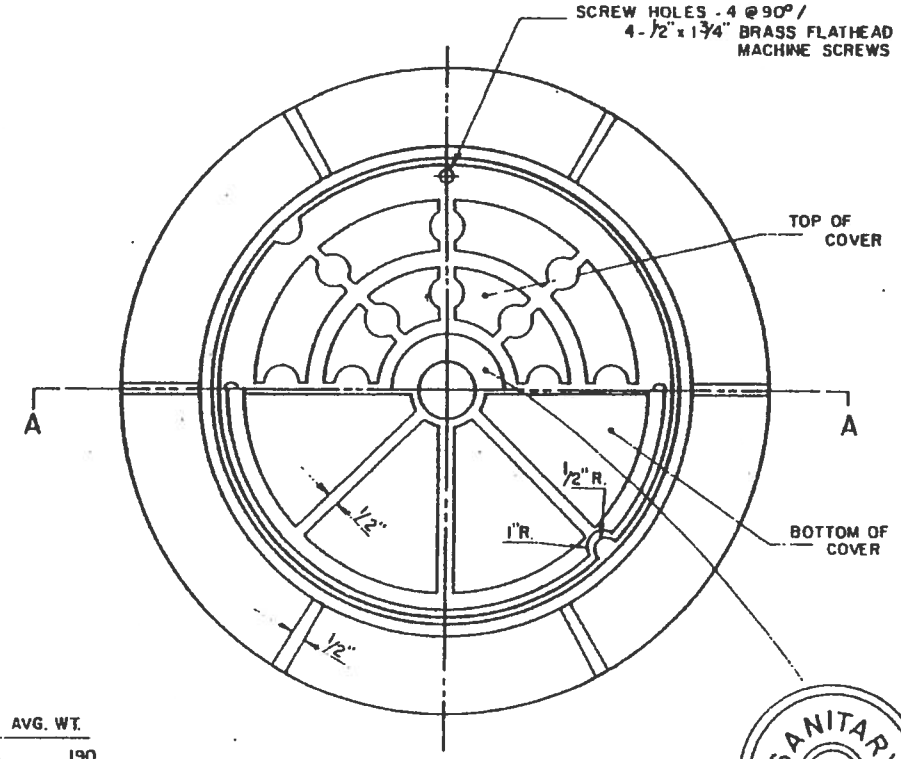

PLAN

MIN AVG. WT.	
RING	190
COVER	120
TOTAL	310

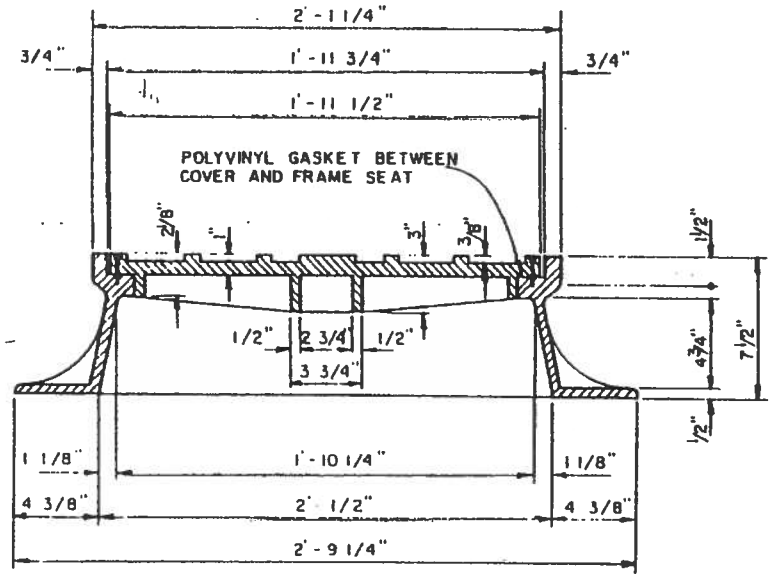

SECTION AA

MANHOLE RING AND COVER SHALL BE
DEWEY BROS. MH-RCR-2001 W

DETAIL CC

REVISIONS	
DATE	DESCRIPTION

SHEET 3 OF 3

City of Oxford STANDARDS

STANDARD MANHOLE RING & COVER
FOR WATERTIGHT MANHOLES

STD. Nº 7.05

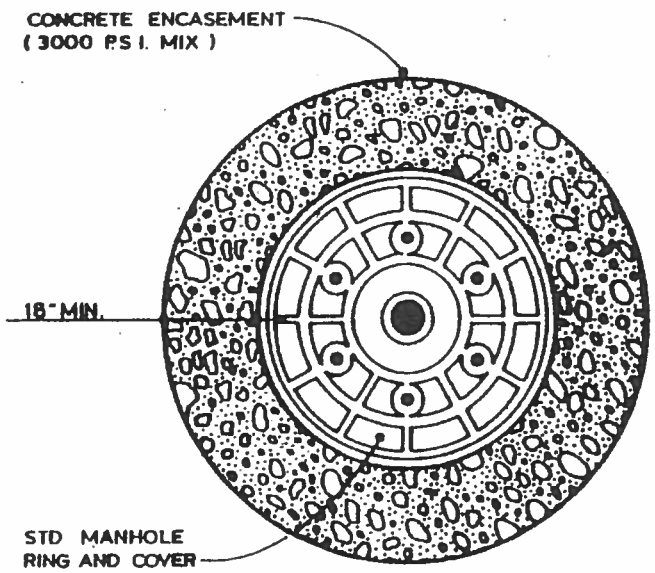

PLAN

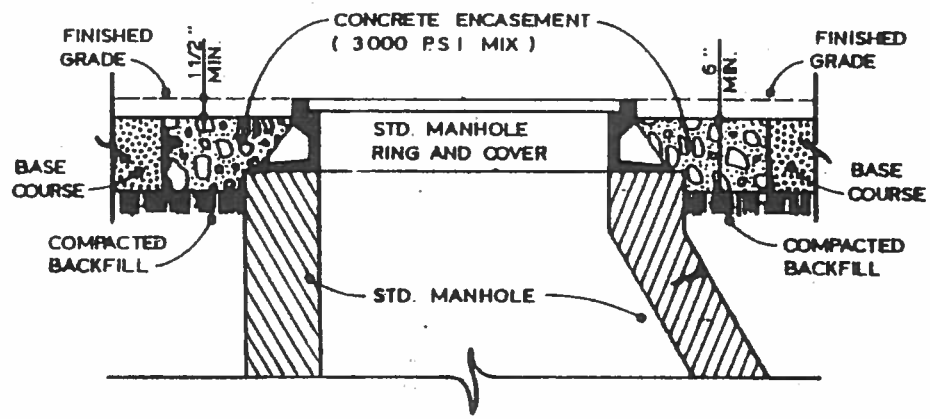

SECTION

REVISIONS	
DATE	DESCRIPTION

City of Oxford STANDARDS	STANDARD MANHOLE RING & COVER ENCASEMENT	STD. NO. 7.06

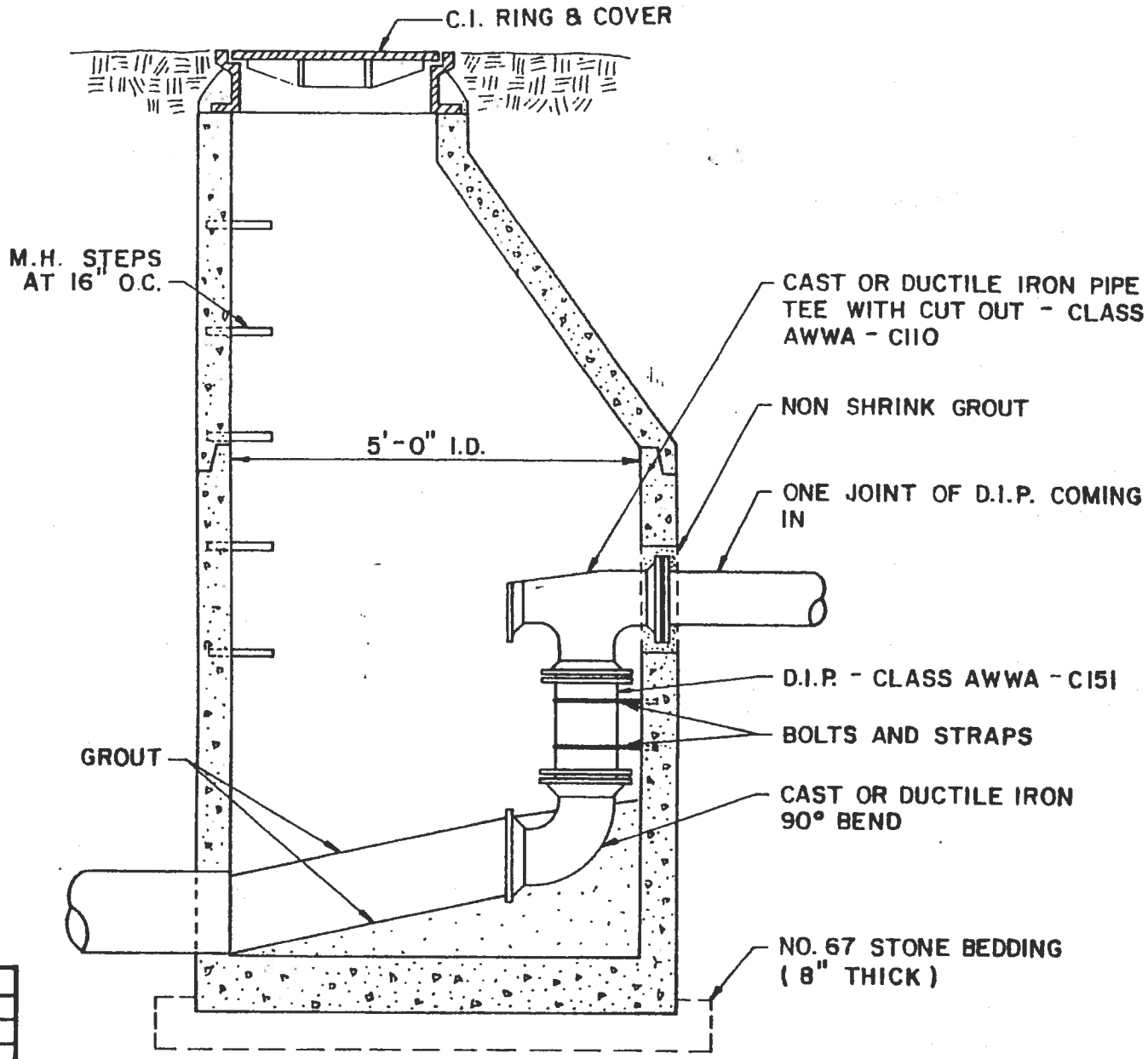

REVISIONS	
DATE	DESCRIPTION

City of Oxford
STANDARDS

STANDARD DROP MANHOLE

STD. NO.
7.07

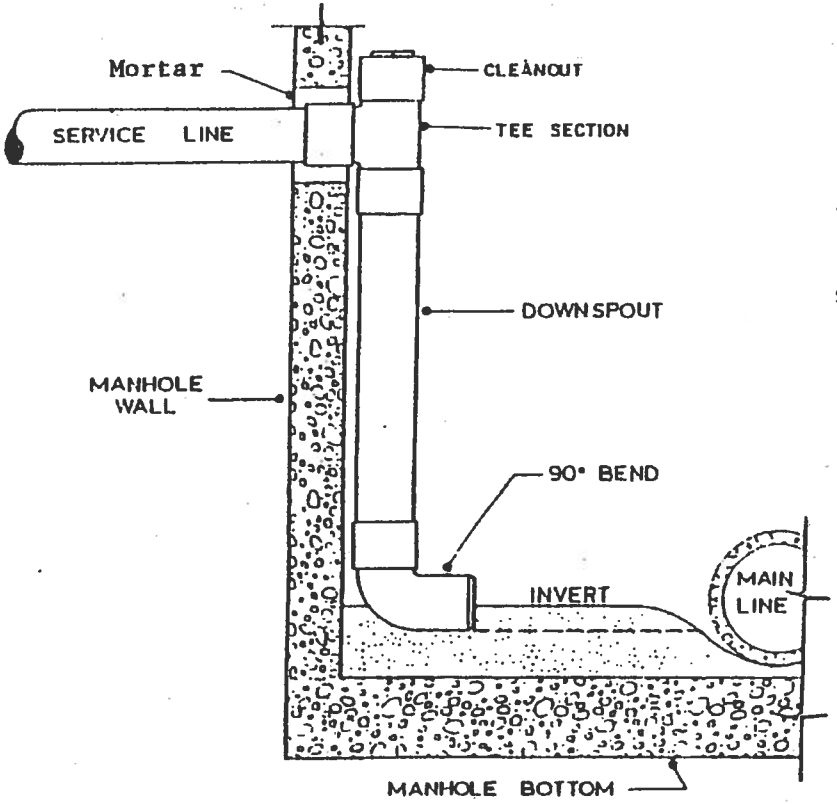

NOTE TO CONTRACTOR :

PIPING CONFIGURATION TO BE USED ON ALL DROPS OVER 30".

DROPS TO BE CONSTRUCTED OF A.B.S. OR P.V.C. PIPE.

PIPING CONFIGURATION TO BE INSTALLED WITHIN 3" OF MANHOLE WALL.

SERVICE LINE MAY NOT ENTER MANHOLE THROUGH CONE SECTION OR ITS' JOINT.

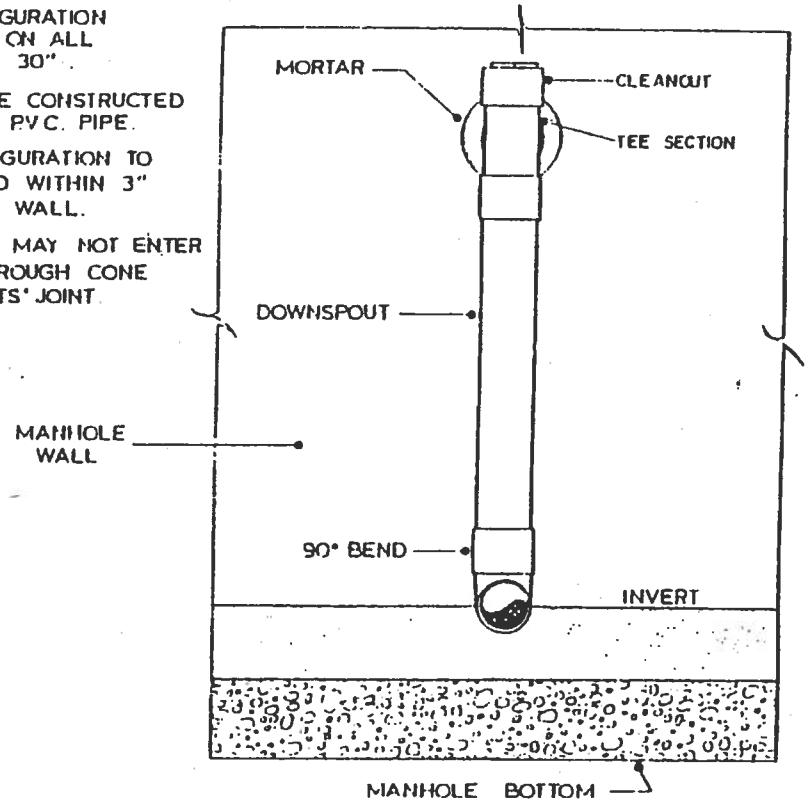

REVISIONS	
DATE	DESCRIPTION

City of Oxford
STANDARDS

STANDARD DROP MANHOLE FOR SEWER SERVICE

STD. NO.
7.08

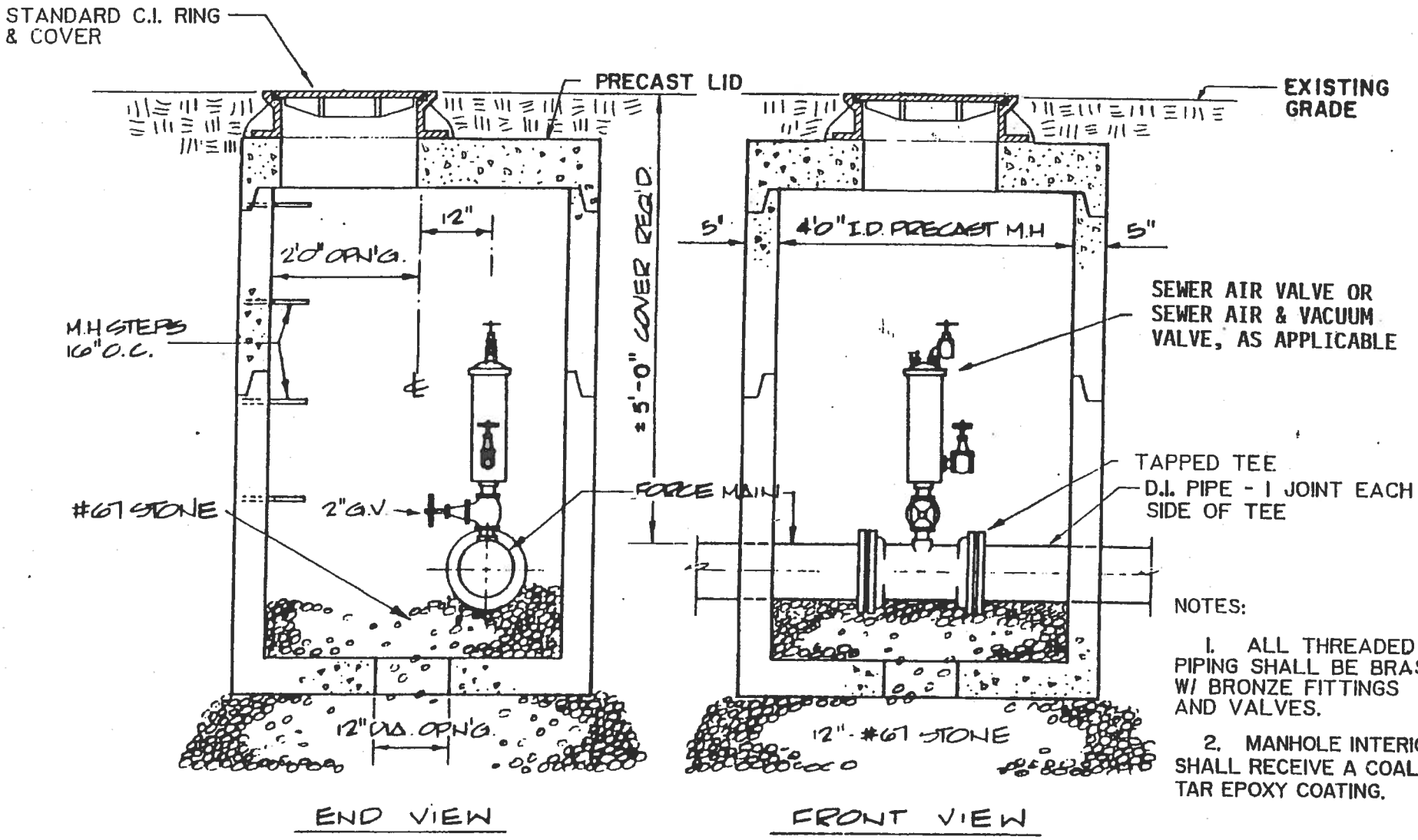

NOTES:

1. ALL THREADED PIPING SHALL BE BRASS W/ BRONZE FITTINGS AND VALVES.

2. MANHOLE INTERIOR SHALL RECEIVE A COAL TAR EPOXY COATING.

REVISIONS	
DATE	DESCRIPTION

City of Oxford STANDARDS

STANDARD AIR RELEASE MANHOLE
FOR SANITARY SEWER FORCE MAINS

STD. NO. 7.09

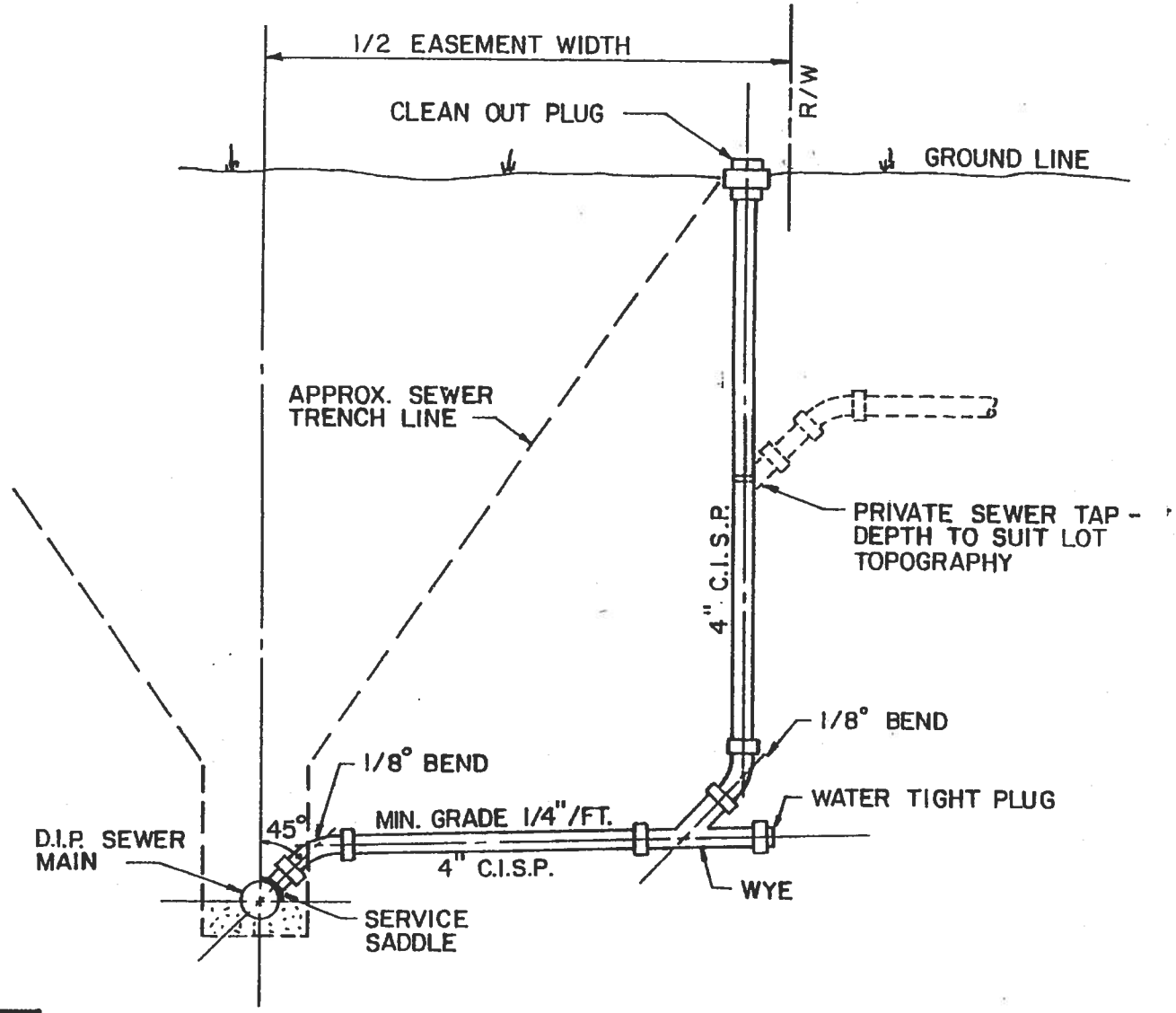

REVISIONS	
DATE	DESCRIPTION

City of Oxford
STANDARDS

4" SANITARY SEWER TAP & SERVICE FOR SEWER MAINS OVER 14' DEEP

STD. NO.
7.10

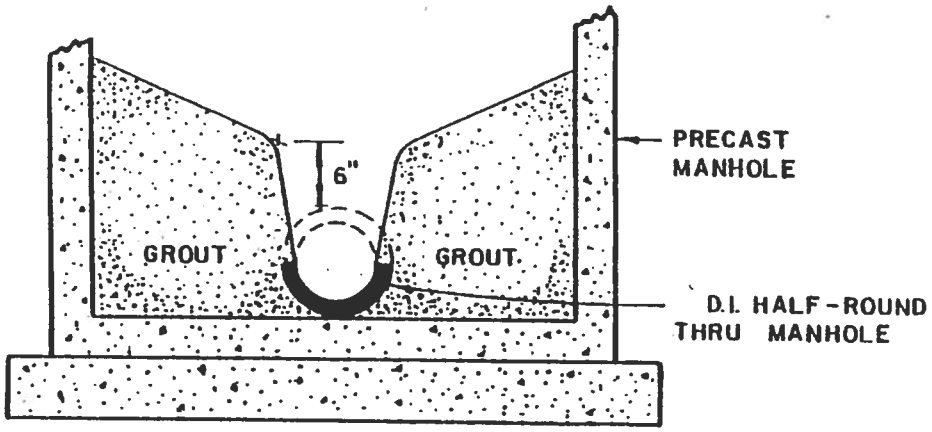

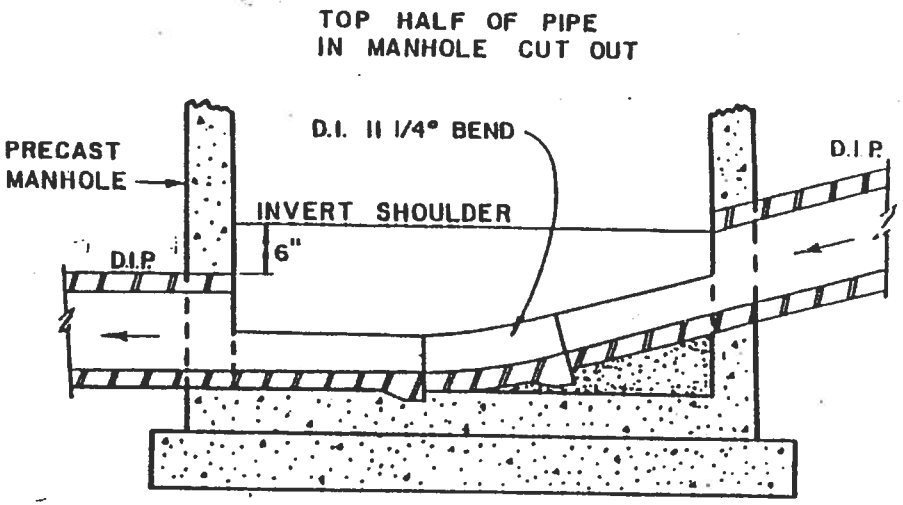

NOTE: NO HORIZONTAL ALIGNMENT CHANGE CAN BE MADE WITHIN THIS MANHOLE TYPE. USE ON GRADES 10% OR GREATER.

EACH JOINT OF PIPE BETWEEN HIGH VELOCITY MANHOLE & MANHOLE UPGRADE SHALL HAVE A THRUST COLLAR. SEE DETAIL NO. 6.11

REVISIONS	
DATE	DESCRIPTION
6-93	NEW DETAIL

City of Oxford
STANDARDS

HIGH VELOCITY MANHOLE INVERT

STD. NO.
7.11

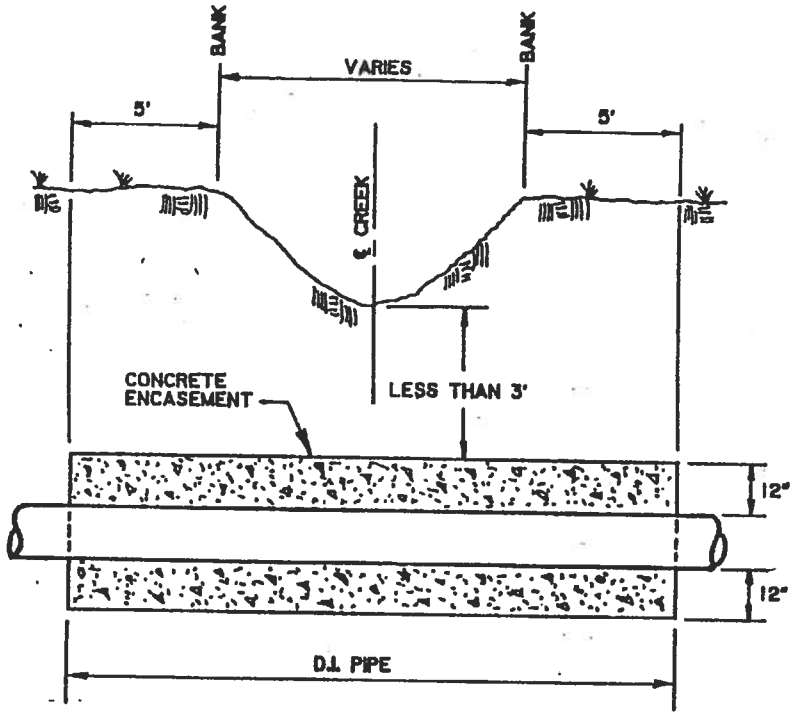

CROSS SECTION

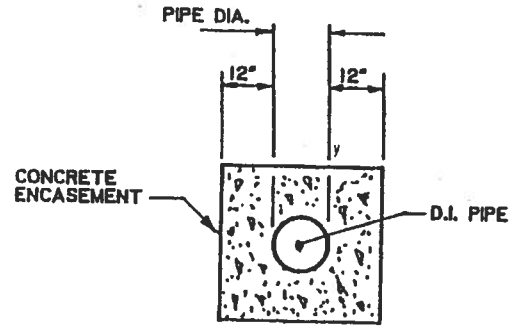

END VIEW

NOTE: CONCRETE SHALL BE 3000 P.S.I.
CONCRETE ENCASEMENT NOT REQUIRED WHEN PIPE IS AT LEAST THREE (3) FEET UNDER ℄ OF CREEK BOTTOM.

REVISIONS	
DATE	DESCRIPTION
6-93	NEW DETAIL

City of Oxford
STANDARDS

CONCRETE ENCASEMENT FOR STREAM CROSSING

STD. NO.
7.12